TOWN OF MANSFIELD, MASSACHUSETTS
Building Department Six Park Row, Mansfield, MA 02048
Phone (508) 261-7360 Fax (508) 261-7343

APPLICATION TO INSTALL SWIMMING POOLS, SPAS, AND HOT TUBS

DATE OF APPLICATION: _____ FEE: In ground $100/ above ground $50

DATE OF ISSUE: _____ PERMIT NUMBER_____

BUILDING OFFICIAL APPROVAL: _____ _____

PLEASE TYPE OR PRINT HIC REGISTRATION #_____expiration_____
(Required for in ground pools only)

NAME & ADDRESS OF APPLICANT: _____
_____ TEL # _____

NAME & ADDRESS OF PROPERTY OWNER: _____
_____ TEL # _____
OWNERS SIGNATURE REQUIRED: * _____

ADDRESS OF POOL INSTALLATION: _____

(Circle choice) ABOVE GROUND IN GROUND GUNITE VINYL METAL WALL CONCRETE

OTHER_____ WIDTH_____ LENGTH_____ MAXIMUM DEPTH _____

A PLOT PLAN IS REQUIRED INDICATING THE LOCATION OF THE POOL
Distance to: rear lot line_____ side lines _____ from dwelling _____ other structure_____
Note: minimum 6 feet from property line-10 feet from *structure-must be in rear yard- corner lots require front yard setbacks from both streets.*Structure includes any dwelling, decks, balconies or other projections. The plot plan must be up to date, indicating these structures.
Distance to leaching facility _____ distance to septic tank _____
Board of health requirements: In ground minimum - 20' from leach facility, 10' from septic tank. Above ground minimum – 4' from septic tank, distribution box, leach field or pits.

Type of filtration system: Diatomaceous earth_____ sand _____ cartridge_____ other_____

Will there be underwater lighting? Y / N accessory building? Y / N If yes, a separate building permit is required for the structure, indicated on the plot plan. Will the pool be heated? Y / N

Estimated cost of the pool $ _____

Pool must conform to 2015 ISPSC, local zoning by-laws, state regulations, and any other applicable sections of 780 CMR. Construction and safety requirements must be compliant and inspected before using the pool.
I HAVE READ AND RETAINED COPIES OF THE ATTATCHED IMPORTANT INFORMATION

Signature: _____Under pains and penalty of perjury all statements are true

REVISED 1-3-2018

The Commonwealth of Massachusetts
Department of Industrial Accidents
1 Congress Street, Suite 100
Boston, MA 02114-2017
www.mass.gov/dia

Workers' Compensation Insurance Affidavit: Builders/Contractors/Electricians/Plumbers.
TO BE FILED WITH THE PERMITTING AUTHORITY.

Applicant Information **Please Print Legibly**

Name (Business/Organization/Individual): _____

Address: _____

City/State/Zip: _____ Phone #: _____

Are you an employer? Check the appropriate box:

1. ☐ I am a employer with _____ employees (full and/or part-time).*
2. ☐ I am a sole proprietor or partnership and have no employees working for me in any capacity. [No workers' comp. insurance required.]
3. ☐ I am a homeowner doing all work myself. [No workers' comp. insurance required.] †
4. ☐ I am a homeowner and will be hiring contractors to conduct all work on my property. I will ensure that all contractors either have workers' compensation insurance or are sole proprietors with no employees.
5. ☐ I am a general contractor and I have hired the sub-contractors listed on the attached sheet. These sub-contractors have employees and have workers' comp. insurance.‡
6. ☐ We are a corporation and its officers have exercised their right of exemption per MGL c. 152, §1(4), and we have no employees. [No workers' comp. insurance required.]

Type of project (required):

7. ☐ New construction
8. ☐ Remodeling
9. ☐ Demolition
10. ☐ Building addition
11. ☐ Electrical repairs or additions
12. ☐ Plumbing repairs or additions
13. ☐ Roof repairs
14. ☐ Other _____

*Any applicant that checks box #1 must also fill out the section below showing their workers' compensation policy information.
† Homeowners who submit this affidavit indicating they are doing all work and then hire outside contractors must submit a new affidavit indicating such.
‡Contractors that check this box must attached an additional sheet showing the name of the sub-contractors and state whether or not those entities have employees. If the sub-contractors have employees, they must provide their workers' comp. policy number.

I am an employer that is providing workers' compensation insurance for my employees. Below is the policy and job site information.

Insurance Company Name: _____

Policy # or Self-ins. Lic. #: _____ Expiration Date: _____

Job Site Address: _____ City/State/Zip: _____

Attach a copy of the workers' compensation policy declaration page (showing the policy number and expiration date).

Failure to secure coverage as required under MGL c. 152, §25A is a criminal violation punishable by a fine up to $1,500.00 and/or one-year imprisonment, as well as civil penalties in the form of a STOP WORK ORDER and a fine of up to $250.00 a day against the violator. A copy of this statement may be forwarded to the Office of Investigations of the DIA for insurance coverage verification.

I do hereby certify under the pains and penalties of perjury that the information provided above is true and correct.

Signature: _____ Date: _____

Phone #: _____

Official use only. Do not write in this area, to be completed by city or town official.

City or Town: _____ **Permit/License #** _____

Issuing Authority (circle one):
1. Board of Health 2. Building Department 3. City/Town Clerk 4. Electrical Inspector 5. Plumbing Inspector
6. Other _____

Contact Person: _____ **Phone #:** _____

Information and Instructions

Massachusetts General Laws chapter 152 requires all employers to provide workers' compensation for their employees. Pursuant to this statute, an ***employee*** is defined as "...every person in the service of another under any contract of hire, express or implied, oral or written."

An ***employer*** is defined as "an individual, partnership, association, corporation or other legal entity, or any two or more of the foregoing engaged in a joint enterprise, and including the legal representatives of a deceased employer, or the receiver or trustee of an individual, partnership, association or other legal entity, employing employees. However the owner of a dwelling house having not more than three apartments and who resides therein, or the occupant of the dwelling house of another who employs persons to do maintenance, construction or repair work on such dwelling house or on the grounds or building appurtenant thereto shall not because of such employment be deemed to be an employer."

MGL chapter 152, §25C(6) also states that "**every state or local licensing agency shall withhold the issuance or renewal of a license or permit to operate a business or to construct buildings in the commonwealth for any applicant who has not produced acceptable evidence of compliance with the insurance coverage required.**" Additionally, MGL chapter 152, §25C(7) states "Neither the commonwealth nor any of its political subdivisions shall enter into any contract for the performance of public work until acceptable evidence of compliance with the insurance requirements of this chapter have been presented to the contracting authority."

Applicants

Please fill out the workers' compensation affidavit completely, by checking the boxes that apply to your situation and, if necessary, supply sub-contractor(s) name(s), address(es) and phone number(s) along with their certificate(s) of insurance. Limited Liability Companies (LLC) or Limited Liability Partnerships (LLP) with no employees other than the members or partners, are not required to carry workers' compensation insurance. If an LLC or LLP does have employees, a policy is required. Be advised that this affidavit may be submitted to the Department of Industrial Accidents for confirmation of insurance coverage. **Also be sure to sign and date the affidavit.** The affidavit should be returned to the city or town that the application for the permit or license is being requested, **not** the Department of Industrial Accidents. Should you have any questions regarding the law or if you are required to obtain a workers' compensation policy, please call the Department at the number listed below. Self-insured companies should enter their self-insurance license number on the appropriate line.

City or Town Officials

Please be sure that the affidavit is complete and printed legibly. The Department has provided a space at the bottom of the affidavit for you to fill out in the event the Office of Investigations has to contact you regarding the applicant. Please be sure to fill in the permit/license number which will be used as a reference number. In addition, an applicant that must submit multiple permit/license applications in any given year, need only submit one affidavit indicating current policy information (if necessary) and under "Job Site Address" the applicant should write "all locations in _____(city or town)." A copy of the affidavit that has been officially stamped or marked by the city or town may be provided to the applicant as proof that a valid affidavit is on file for future permits or licenses. A new affidavit must be filled out each year. Where a home owner or citizen is obtaining a license or permit not related to any business or commercial venture (i.e. a dog license or permit to burn leaves etc.) said person is NOT required to complete this affidavit.

The Department's address, telephone and fax number:

The Commonwealth of Massachusetts
Department of Industrial Accidents
1 Congress Street, Suite 100
Boston, MA 02114-2017

Tel. # 617-727-4900 ext. 7406 or 1-877-MASSAFE
Fax # 617-727-7749
www.mass.gov/dia

Revised 02-23-15

SAMPLE

FOR DESIGN PURPOSES ONLY

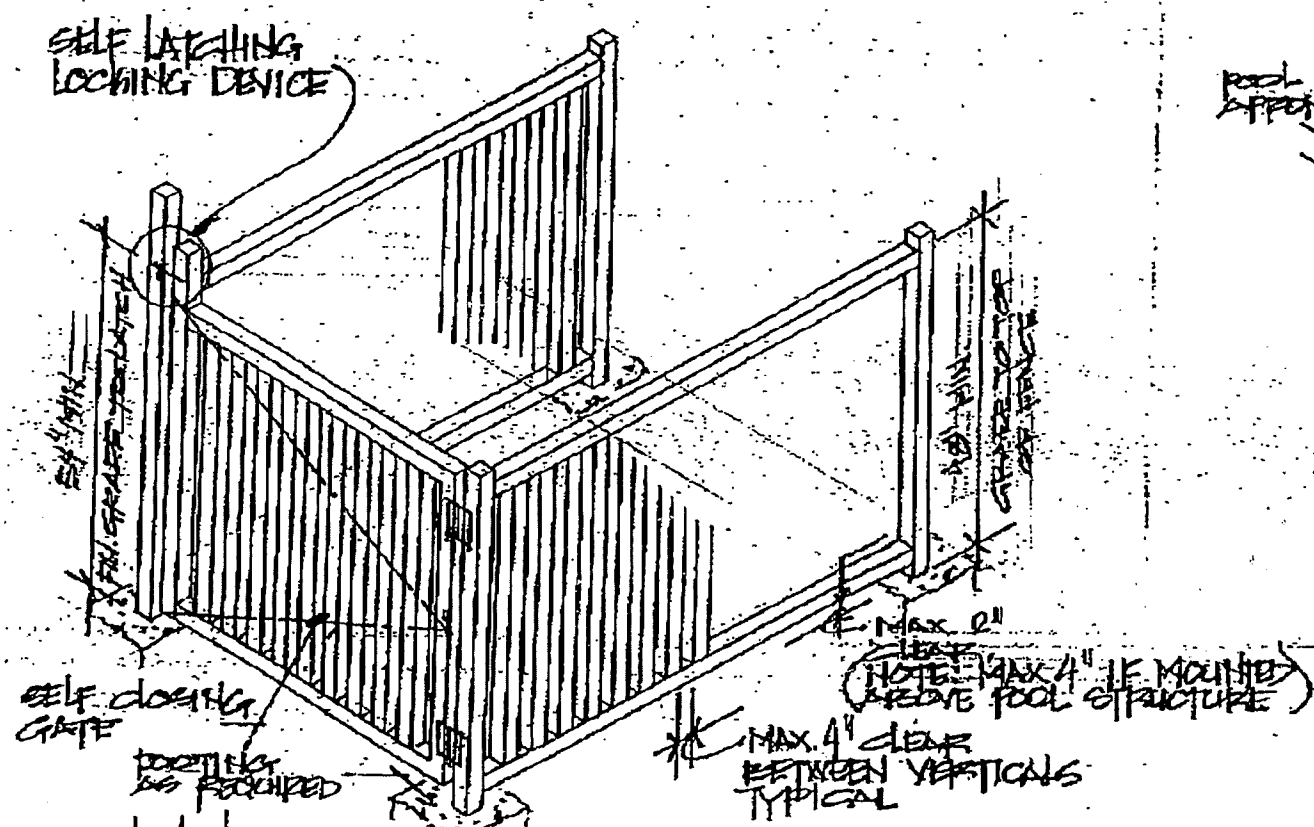

ENCLOSURE ISOMETRIC

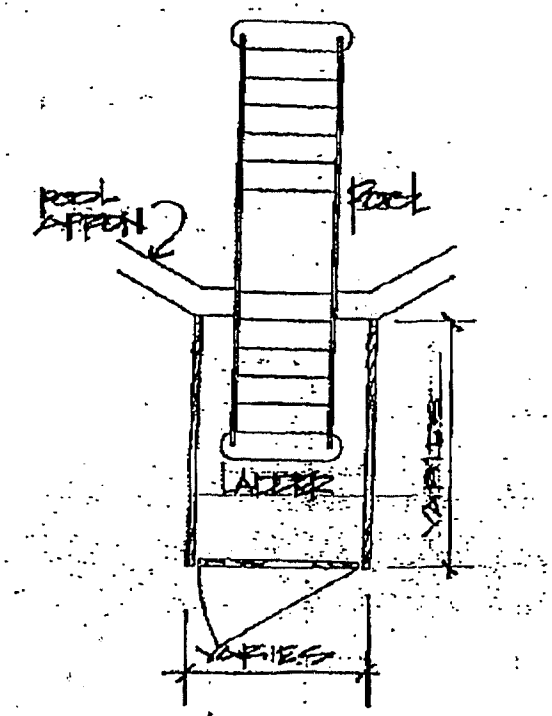

PLAN
"A" FRAME LADDER

SELF-LATCHING SYSTEM

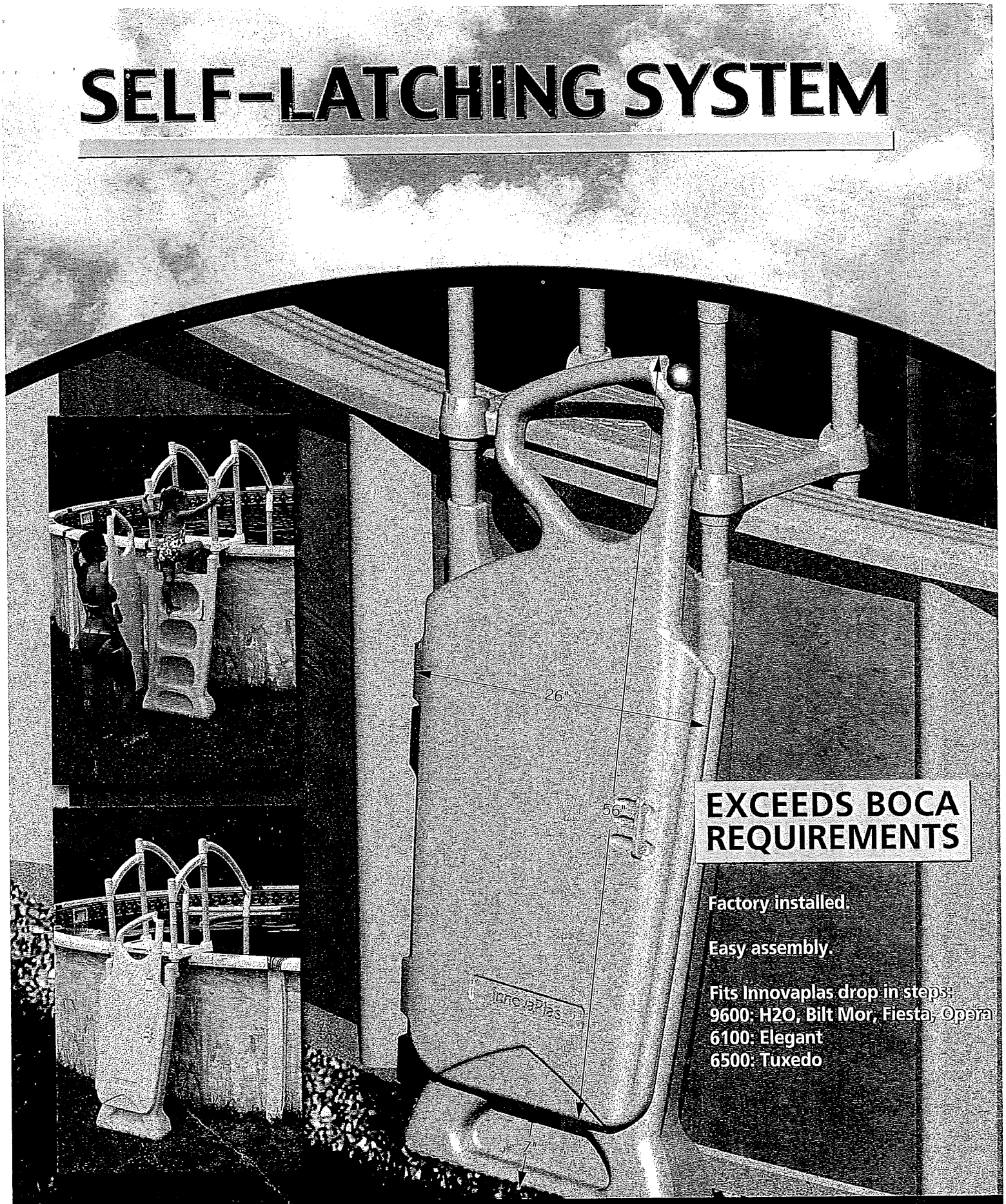

EXCEEDS BOCA REQUIREMENTS

Factory installed.

Easy assembly.

Fits Innovaplas drop in steps:
9600: H2O, Bilt Mor, Fiesta, Opera
6100: Elegant
6500: Tuxedo

InnovaPlas
PRODUCTS

SAMPLE

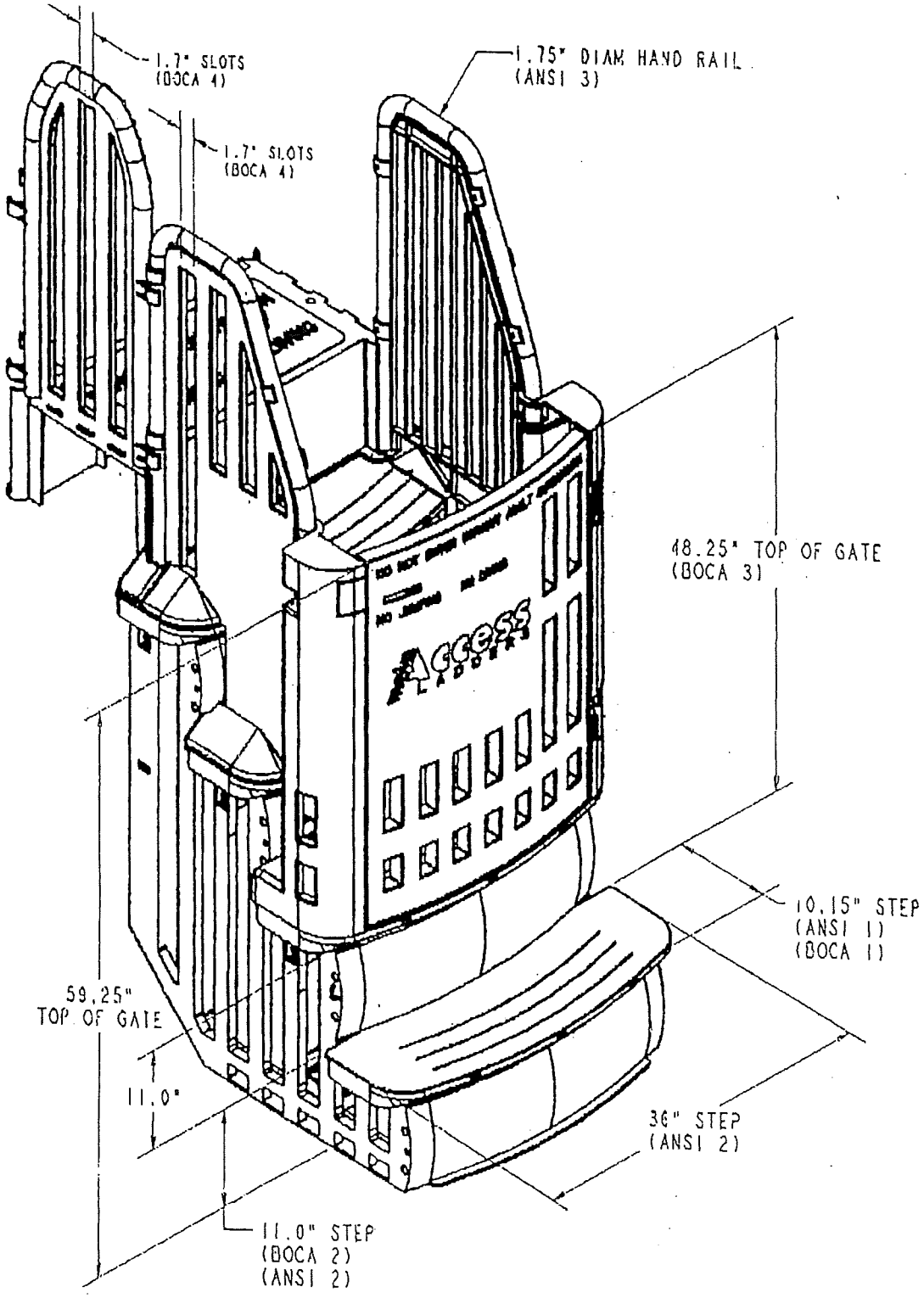

MATERIAL: FINISH: SCALE:	PROPRIETARY NOTICE: THIS DRAWING IS THE PROPERTY OF RECREATIONAL PRODUCTS, INC AND SHALL NOT BE USED, DISCLOSED OR COPIED WITHOUT WRITTEN CONSENT FROM RECREATIONAL PRODUCTS, INC.	DRAWN BY: J HAHN DATE: 03-08-01 APPROVED BY: DATE:	ENGINEERING INNOVATION, INC. 1516 Cottonwood LN NE Cedar Rapids, IA 52402
UNTOLERANCED DIMENSIONS .XX ± .01 FRACTIONS ± .01 .XXX ± .005 ANGLES ± 1 DEGREE	UNLESS SPECIFIED ALL DIMENSIONS IN INCHES THIRD ANGLE PROJECTION	TITLE: EASY ACCESS STEP WITH ENCLOSURE	
		CADD FILE: FINAL.ASM	MODEL #:

Town of Mansfield
6 Park Row, Mansfield, Massachusetts 02048

Building Department

ROBERT BLACKMAN/ZONING ENFORCEMENT/BUILDING INSPECTOR
LEE DAY/ ASSISTANT BUILDING INSPECTOR
ANTHONY STRYCHARZ/ MECHANICAL INSPECTOR

REQUEST FOR BUILDING INSPECTION

TODAY'S DATE _____ DATE OF INSPECTION _____

I, _____ HERBY REQUEST AN INSPECTION UNDER MA STATE BUILDING CODE 780 CMR NINTH EDITION R109 OR 110.5:

_____ FOUNDATION

_____ MECHANICAL

_____ROUGH _____ FINAL

_____CHIMNEY

_____ ROUGH

_____ INSULATION

_____ FINAL

_____ FOUNDATION RE-INSPECTION ($30)

_____MECHANICAL RE-INSPECTION ($30)

_____ CHIMNEY RE-INSPECTION ($30)

_____ ROUGH RE-INSPECTION ($30)

_____INSULATION RE-INSPECTION ($30)

_____OTHER RE-INSPECTION ($30)

EXPLAIN TYPE OF INSTALLATION: _____

PERMIT #REQUIRED: _____ INSTALLERS CONTACT #REQUIRED: _____

ON PROPERTY LOCATED AT: _____
STREET ADDRESS (AND LOT NUMBER IF NEW SUBDIVISION)

PREMISES OWNED BY: _____OWNER'S CONTACT # REQUIRED _____

_____
Signature **Home Owner/Builders License#**

UPON RECEIPT OF THIS REQEST INSPECTIONS WILL BE MADE WITHIN THIREE (3) WORKING DAYS. WHEN AN INSPECTION IS REQUIRED AND THE WORK IS NOT READY, THE PREMISES ARE LOCKED, OR NOT ACCESSIBLE BY MEANS OF A SET OF STAIRS, OR IT IS NOT ACCEPTABLE, A REINSPECITON FEE OF $25 WILL BE CHARGED. THIS FEE IS TO BE PAID PRIOR TO THE REINSPECTION.

OFFICE USE ONLY:

DATE INSPECTED: _____ *PASS* _____ *FAIL* _____

INSPECTOR OF BUILDINGS/ASSISTANT INSPECTOR: _____

MECHANICAL INSPECTOR: _____

Phone (508)261-7360 • Fax (508)261-7343 •