Soldier's Memorial Hall

Park Row
Mansfield, Massachusetts 02048

Exterior Assessment Report

March 5, 2014

McGinley Kalsow & Associates, Inc.
Architects & Preservation Planners
324 Broadway, PO Box 45248
Somerville, MA 0245

McGinley Kalsow & Associates, Inc.
ARCHITECTS & PRESERVATION PLANNERS

TABLE OF CONTENTS

- **Section 1**
  Executive Summary

- **Section 2**
  Architectural Assessment
  - Report
  - Photographs

- **Section 3**
  Test Reports for Lead and Asbestos Containing Materials

- **Section 4**
  Cost Estimate

- **Section 5**
  Drawings
  - Historic Drawings
  - Existing Condition Drawings
  - Scope Description Drawings

Executive Summary

McGinley Kalsow & Associates, Inc.
ARCHITECTS & PRESERVATION PLANNERS

EXECUTIVE SUMMARY

Soldier's Memorial Hall in Mansfield was built circa 1901 in a Victorian Gothic style to the design of the prestigious architecture firm of Peabody and Stearns. Peabody and Stearns have since become regarded as the pre-eminent masters in what was to be known as the "Shingle Style". (see photo 1) Mansfield citizen Elizabeth F. Noble gifted the land, selected and paid for the architect, and was the major financial contributor to the construction of the building. The building originally housed the Town Library in the first floor, and the second floor was built as an assembly hall for the Grand Army of the Republic Civil War veterans. The building exterior features a field stone first floor, surmounted by a shingled second story. The Gothic style is reinforced by a main pointed Gothic arched entry with granite jambs, with a large Gothic tripartite window above. Scalloped shingled elements and diamond paned windows contribute to the fanciful style of the building. The building was individually listed on the National Register of Historic Places in 1995. Most of the building's historic fabric and features remain intact. Currently the Mansfield School Department have administrative offices inside, in space that has been renovated for their use.

In 2013, the Town of Mansfield commissioned preservation architects and planners McGinley Kalsow & Associates, Inc., to inspect the building exterior and to provide an assessment report of the building's condition. Prior to commencing the report, McGinley Kalsow & Associates researched and located blueprints from the original drawings of Peabody and Stearns at the Massachusetts Archives Collection, and they are attached to this report. Several site visits were made by the assessment team, and the team produced existing conditions drawings. Additionally, McGinley Kalsow produced preliminary scope drawings, along with a detailed cost estimate for the scope. For some items, such as the comparison of window restoration vs window replacement, the team was asked to look at alternative costs.

FLI Environmental, Inc. consulted on the assessment by sampling, testing, and identifying asbestos-containing materials and identifying the presence of lead-based paints. These test reports are included here.

The Cost Estimate was prepared by D.G. Jones, International, Inc.

The original flagpole bracket remains. An interesting preservation discussion could focus on whether to return the flagpole. It probably no longer exists because it was difficult to maintain and to use. Note in the postcard above both the flagpole, and the dark wood trim colors.

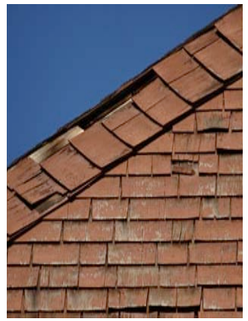

Detail views of wood shingle siding illustrate missing, deteriorated, and cupped shingles that should be replaced and stained.

Asphalt shingles are not original to the building and detailed views show a number of missing tabs.

Existing aluminum gutters have spike-and-ferrule attachments that have pulled out and gutters have deformed due to snow load. Gutters should be replaced with a heavier duty gutter with an improved attachment detail.

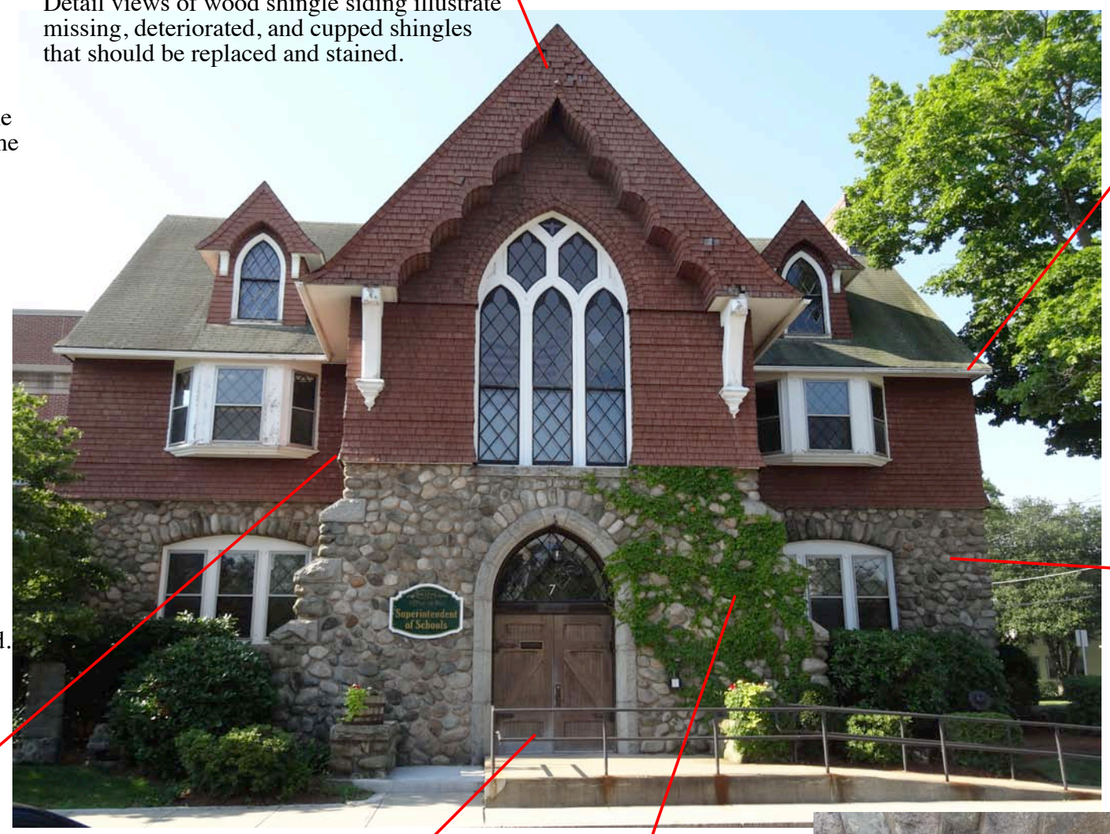

Wood trim needs selective epoxy repair and/or replacement, and trim should be painted. Note that paint analysis should be done, as the original paint color for trim would have been dark as illustrated in the colored postcards of the building.

In general, the original windows are in fair condition and are restorable. Note that the building's eave overhang, coupled with the addition of storm windows has helped preserve the condition of the 2nd floor windows. Existing window sash throughout should be re-glazed and re-roped, and painted. Weatherstripping can be added during restoration to reduce air infiltration.

A detail view of the masonry walls shows mortar cracks, indicating that repointing is required.

Shingles are in very poor condition at the flared skirt where they have been exposed to water. They should be replaced.

Doors need repair of bottom rails and refinish.

Vine growth should be removed as it is detrimental to the mortar.

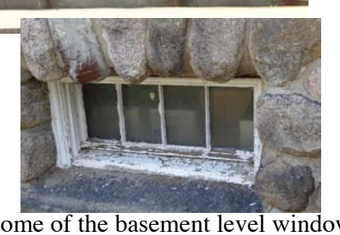

Some of the basement level windows were recently replaced when the new addition was built. Some, like this one, should be replaced.

Site walls need repair in some areas

Town of Mansfield, MA

Soldier's Memorial Hall

2 Park Row
Mansfield, MA 02048

Exterior Assessment

Scale: NTS
Date: 12/9/13
Drawn By: DLM
Checked by: DLM
Reference:

McGinley Kalsow & Associates, Inc.
ARCHITECTS & PRESERVATION PLANNERS
324 Broadway ~ PO Box 45448
Somerville, MA 02145-8803

Telephone: 617-625-8901
Fax: 617-625-8902

Architectural Assessment

McGinley Kalsow & Associates, Inc.
ARCHITECTS & PRESERVATION PLANNERS

ARCHITECTURAL ASSESSMENT

ROOFING

While the original drawings of the building are not definitive on material, it is most likely that the original roofing material for the building was wood shingles. Wood shingles would have been a logical choice, and is certainly consistent with the other known works in the Shingle Style by the architects Peabody and Stearns. The current roof is an asphalt shingle replacement, and while the exact date of its installation is unknown, the high number of missing tabs, and the visible weathering indicates that the roof is well beyond its useful life. (See photo 2) There are a number of active leaks near the vicinity of dormers, that could be caused by valley leaks, sidewall flashing problems, or worn roofing. (See photo 3) Existing roof shingles should be removed, along with any felt underlayments, down to the existing wood roof sheathing, and a new roof must be installed. In the course of doing this work, ice and watershield underlayment should be installed in all of the normal areas that are recommended by the manufacturer, such as all valleys, ridges, eaves, rakes and sidewalls of the dormers. Material for the replacement roof is open to debate; the historically accurate replacement would be cedar shingles, but a good quality fiberglass reinforced asphalt shingle may offer greater longevity at a more economical cost. In the cost estimate, we have provided an alternate cost for wood shingles, for comparison and budgeting purposes.

The gutters and downspouts are a residential-quality painted finish aluminum, and are in poor condition. They feature bent and twisted areas caused by ice build-up damage and because they are not sturdy. The existing spike-and-ferrule is not a sturdy attachment method for gutters. (see photo 4) The best long-term and appropriate replacement would

be copper gutters with an improved traditional strap-hanging method, and copper downspouts.

WOOD SHINGLE SIDING

The wood shingle siding of Memorial Hall is a very important character-defining element of the building, and a hallmark of the architectural style that the building's architects were to become famous for. There have been some fairly recent replacements of siding done in some areas, but at this point, the overall general condition of the shingles is poor (see photo 5), with numerous areas of missing, severely cupped, and deteriorated shingles. The flared skirt of shingles that occurs at the bottom few courses is a very important feature of the building and the Shingle Style, but unfortunately the very nature of the design makes it more exposed to water and vulnerable to rot than if the shingles were directly vertical (see photo 6) The horizontal banding in the shingle pattern which is created by doubling the thickness of shingles every 6 courses is an important detail to maintain when re-siding, and it is consistent with the design shown in the original drawings of the building.

Replacement of the wood shingle siding with new stained cedar shingles should be a high-priority restoration item for the building to prevent water leakage, and damage to wood framing and sheathing underneath.

The original drawings of the building depict additional ornate shingle patterns (See photo 7), that are not evident at the building today. Historic photos have also not shown that these patterns ever existed, so it is quite possible that it is a design feature from the architects that never was realized in the building. (Value engineering existed in 1900, just as it does today!)

WOOD TRIM

Existing wood trim at the building includes eaves and soffits, rakes, brackets, and exterior window casings and trim. For the most part, the trim is in fair to good condition,

but would require some repairs, epoxy consolidation, and some selective replacements of missing and/or deteriorated pieces (See photo 8). All of these wood pieces should be painted. When repainting, there is the opportunity to return to the original dark colored trim that would have been used and would be appropriate to the era of original construction. The historic tinted postcard gives an indication of what the original paint scheme was (see photo 9) We would recommend doing an analysis of the existing paint layers to determine what original colors were used.

MASONRY

The first floor exterior of the building features round fieldstones, that were described in a 1979 narrative from the Mansfield Historical Commission as follows: "The decision to use ordinary field stone was not only dictated by financial necessity but it was also viewed as means to further encourage community participation since all townspeople were invited to contribute individual stones of 'unique shapes'." Granite trim stones are also used within the fieldstones, such as at window sills and as jambs to the prominent gothic arch of the main entry. The stone is all in good condition, but the mortar exhibits some cracking. (see photo 10) Repointing the mortar is a lesser-priority restoration item, but there would certainly be economic advantages to including this work in a comprehensive restoration project, to minimize mobilization, general conditions, and staging costs to return to the building to do this work in the future.

The existing brick chimney is in good condition and looks like it has been well maintained. (see photo 11)

WINDOWS

The diamond-patterned muntin layout of the wood windows is an important character-defining element (see photo 12) The windows are original to the building, and are generally in good condition for their age. The windows are painted on the exterior

and feature a stain and transparent finish on the interior. They exhibit putty deterioration and some wood deterioration that would be expected, but they are generally intact. The windows have benefited from being protected by exterior storm windows, that have increased their longevity while offering some energy efficiency. The windows are very restorable, and recent research by preservationists has found that restored wood windows, with storm windows, will thermally perform as well as replacement windows. A general recommended restoration program would include reglazing, carefully reinstalling the original glass, and replacing missing, broken, and mismatched panes to match. It should be noted that the existing glazing putty was determined to be asbestos-containing in our building assessment, and therefore would require abatement prior to reglazing. Deteriorated wood muntins can be repaired and in the worst cases, replaced. Loose wooden sash corners would be re-secured, and sash re-roped. Missing hardware pieces should be replaced, and bronze weatherstripping can be added to reduce air infiltration. The existing storm windows should be replaced with updated efficient models as part of the window restoration, to improve the energy efficiency of the openings and to provide weather protection to the restored wood windows. A number of sash have been removed to accommodate window unit air conditioning units, and they can be found in storage in the attic and basement. It is important that these sash be retained, as they are important pieces of building fabric that could be reinstalled if alternative air conditioning methods were added to the building in the future.

During recent renovations to the building interior, some of the original basement windows were replaced with new windows. This seems to be a reasonable approach that should be continued for the remainder of the building since these windows are a minor contribution to the building's character, and generally they are too deteriorated to be restored (see photo 13).

In general, we would recommend restoration of windows over replacement as a preservation approach. In the cost estimate, we have included costs for replacement windows for discussion purposes.

DOORS

The main front doors appear to be original to the building, matching what is shown on the original drawings, and are in fairly good condition. They should be refinished to extend their life. The bottom rails and the bottoms of the side rails show the normal type of deterioration that one would expect from years of wicking moisture from the ground and possible exposure to de-icing salts (see photo 14) A restoration treatment would be to replace the bottom rails and install dutchmen repairs to the bottoms of the side rails. Existing hardware should be refurbished, and we recommend replacement of the hinges.

The original bulkhead hatch-type doors to provide basement access on the south side were removed, and an access shed was added to provide a full height entry/exit door (see photo 15) While this feature is a later addition, its purpose is understandable, as it is a much safer and convenient way to access the space. We recommend keeping this non-original addition, but re-shingling and re-roofing it and replacing the flush door with a new paneled wood door (and hardware) that would harmonize with the general character of the building. Note that when this shed is re-shingled and re-roofed, an alternate roofing/flashing detail needs to be employed where the roof currently intersects an existing double-hung window to prevent water infiltration and damage at the window.

ASBESTOS AND LEAD CONTAINING MATERIALS

Environmental consultant FLI Environmental, Inc. sampled a number of materials at the exterior including roof shingles, roof felt underlayment, wood shingle underlayment paper, roof flashing materials, and glazing putty at windows. Laboratory tests of the sampled materials indicated that only the glazing putty at the windows contains asbestos. Therefore, as part of the window restoration, the putty must be abated, and this work must be done on site, as regulations prohibit transporting the asbestos.

Testing indicated the presence of lead paint at the painted wood trim. Regulations do not require this paint to be abated, but workers must comply with safety regulations for disturbing, handling and disposing of the paint during the building restoration process.

OTHER ITEMS

Existing vines that are planted at the building's base shoot tentacles that attach to the masonry, and grow into cracks in the mortar and provide a moisture path to the building. When the vines reach the shingled 2nd story, they have grown under shingles and led to shingle deterioration. These vines should be removed. (see photo 16) .

The low stone site walls are an important feature to the overall building design, and built according to the original architectural design. The walls have cracks, displacement, damage, and missing stones (see photo 17). While it is certainly not as high a priority as repairs that stop water infiltration to the building, it would be good to rebuild damaged portions of the wall and reset and repoint the capstones in a comprehensive building restoration.

Also of lower priority, would be site repairs associated with the non-original entry ramp fix cracked and spalled concrete, and to paint the handrails (see photo 18).

And finally, the issue of the flagpole at the center gable bears discussion. Historic photographs and the remaining mounting brackets give evidence of its design. (See photos 9 and 19) It is understandable why it may have fallen out of favor due to its maintenance requirements, but it would make an impressive finishing feature to a comprehensive restoration to the building. We have found in similar projects that the restoration of flags and flagpoles often attract interest and support from veteran's groups, so funding may be available. Restoration with a fiberglass replica of the original pole might be a good durable solution.

Photo 1: "Kragsyde" by architects Peabody & Stearns in Manchester-by-the-Sea is acknowledged as the most important example of Shingle Style. Demolished in 1929.

Photo 2: An overall view of the roof illustrates missing asphalt shingles.

Photo 3: Evidence of active leaks below dormers.

Photo 4: Spike-and-ferrule attachments have failed at gutters and ice damage has deformed them.

Photo 5: Overall view of shingle siding indicates poor condition.

Photo 6: Detail of shingle deterioration at flared skirt.

Photo 7

Photo 8: Wood rake trim requiring repair.

Photo 9: Note dark trim paint in historic paint scheme.

Photo 10: A close examination shows cracks in the existing mortar.

Photo 11: Detail photo shows brick chimney in good condition.

Photo 12: Detail of existing double hung wood windows with diamond muntin pattern.

Photo 13: Detail of original basement window.

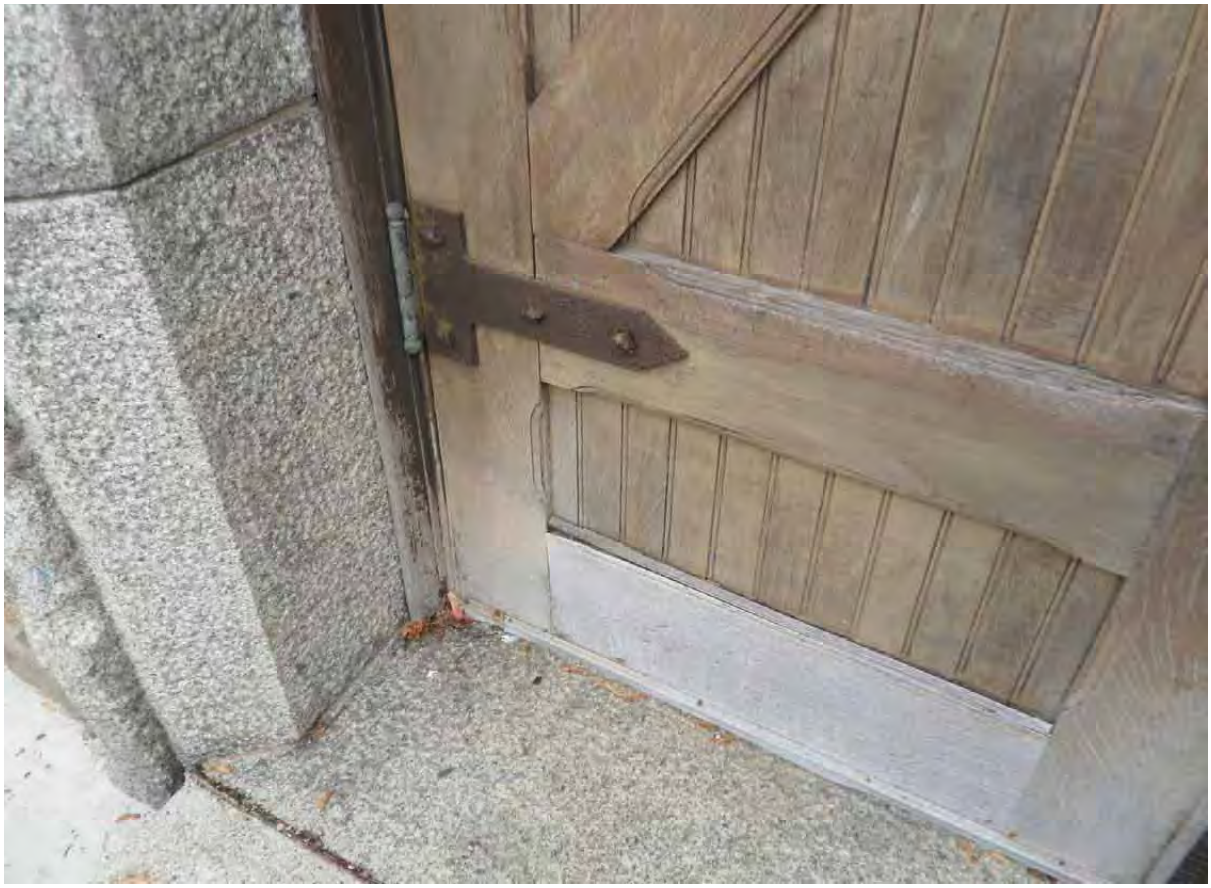

Photo 14: Detail view of original entry door.

Photo 15: Addition and door that replaced original bulkhead hatch doors.

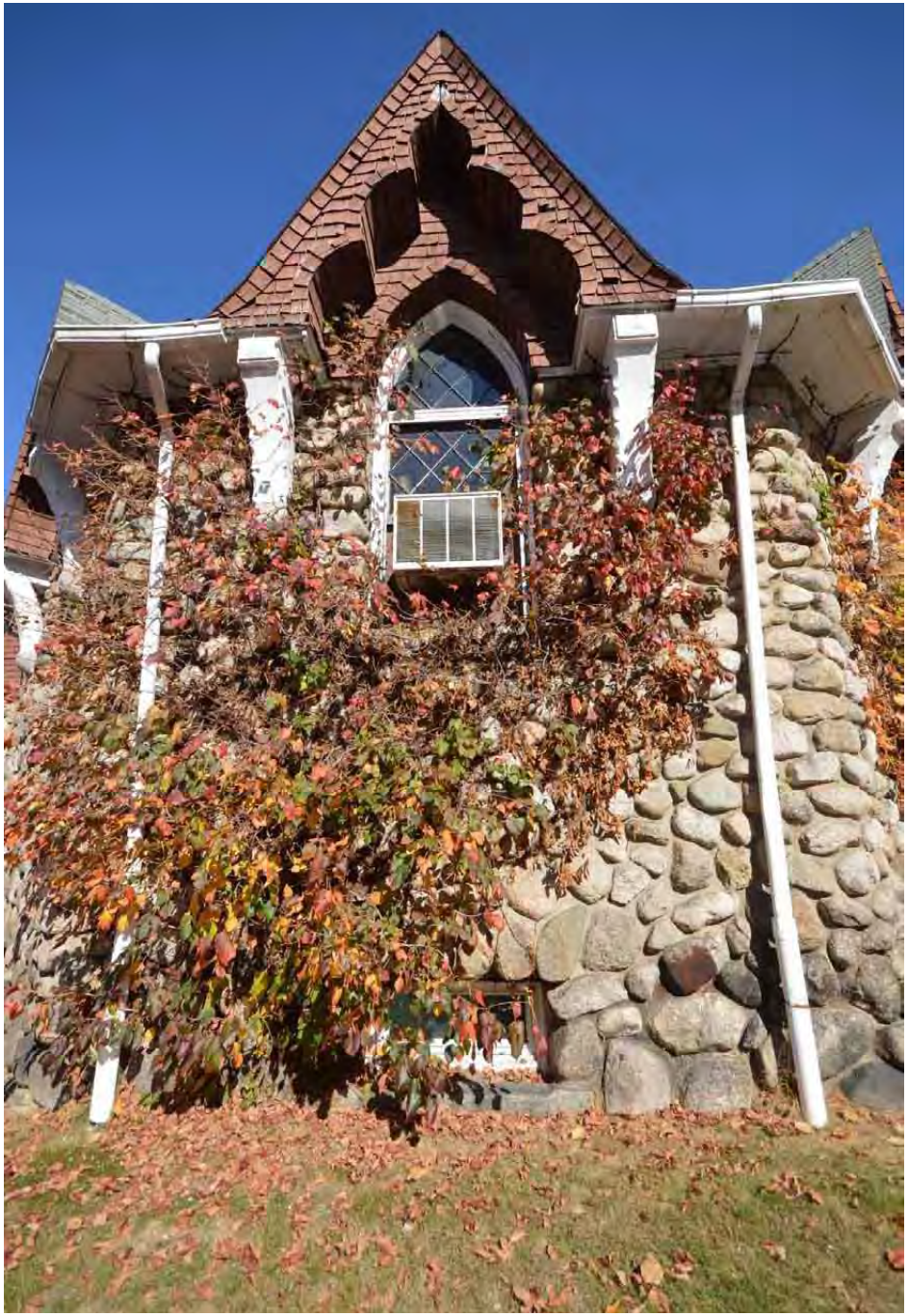

Photo 16: Vine growth should be removed as it is detrimental to the building.

Photo 17: Damage at existing site walls.

Photo 18: Concrete ramp needs minor repair and railing should be painted.

Photo 19: Detail of flag pole mounting bracket.

Test Reports for

Lead and Asbestos Containing Materials

FLI Environmental

69 Bridge Street
Dedham, MA 02026
Phone 781.251.0040
Fax 781.251.0901

December 10, 2013

Mr. Douglas Manley
McGinley, Kalsow & Associates, Inc.
324 Broadway
Somerville, MA 02145

Re: Pre-Renovation Inspection for Asbestos Containing Materials
Mansfield Soldiers Memorial Hall
2 Park Row
Mansfield, Massachusetts
FLI Project # 13-1930

Dear Mr. Manley:

At your request FLI Environmental, Inc. conducted an exterior pre-renovation inspection for suspect asbestos containing materials in the three-story, occupied, commercial property located at 2 Park Row, Mansfield, MA. As part of the inspection a total of sixteen (16) bulk samples of suspect materials were collected and analyzed for asbestos content. The inspection was conducted by Don Corneau, MA DOS Asbestos Inspector License #AI 041886 on December 4, 2013. This report outlines the initial visual survey, sampling, and summary of analytical results provided by FLI.

A. Summary of Asbestos-Containing Materials:

1. The following building materials and general location were identified as **Asbestos-Containing materials**:

Asbestos Containing Material Summary Table				
Material (ACM)	**General Location**	**Conditions F/NF**	**Estimated Quantity**	**Sample #s**
Window Glazing	Lower Level Exterior Windows	Damaged NF	100 LF	004A&B 2% chrysotile

B. Summary of Non Asbestos Building Materials:

1. The suspect materials listed below were sampled, analyzed and found **not to contain asbestos or less than (<1%).** The exact sampling location and analytical results are provided in the analytical data table appendix. These materials may be classified and treated as non-asbestos materials.

Non-Asbestos Material Summary Table		
Material (Non-ACM)	**General Location**	**Sample #s**
Asphalt Roof Shingles	Exterior Roof	001A&B
Black Roof Paper	Exterior Roof	002A&B
Window Glazing	Upper Level Exterior Windows	003A&B
Flashing Material	Lower Level Flat Roof	005A&B
Green Shingle Paper	Exterior Wood Shingles	006A&B
Asphalt Roof Shingles	Lower Layer, Lower Level Flat Roof	007A&B
Asphalt Roof Shingles	Top Layer, Lower Level Flat Roof	008A&B

Please See Section D Conclusions & Recommendations

C. Bulk Sampling:

1. Bulk samples were collected and submitted via chain of custody to EMSL Analytical Services, Inc. located in Woburn, Massachusetts. The samples were analyzed by Polarized Light Microscopy per EPA method 600/R-93-116, July 1993. The detection limit of the EPA recommended method is one percent asbestos by weight. Materials containing greater than one per cent asbestos are treated as asbestos-containing as determined by the EPA.

D. Conclusions and Recommendations

1. If disturbed by the renovation/demolition, all asbestos containing materials must be removed and disposed of by a MA Licensed Asbestos Contractor.

2. The majority of the space is built on a concrete and wood foundation with exterior hand placed field stone walls.

3. No sampling for asbestos containing materials was performed in the interior of the commercial property at this time.

E. Remarks:

1. Bulk samples were collected in a random manner and transported via chain of custody to EMSL Analytical Laboratory located in Woburn, Massachusetts.
   The samples were analyzed by Polarized Light Microscopy per EPA method 600/R-93-116, July 1993. The detection limit of the EPA recommended method is one percent asbestos by weight. Materials containing greater than one per cent asbestos are treated as asbestos-containing as determined by the EPA. The laboratory is

certified by the National Institute of Standards and Technologies NIST/NVLAP Program (NVLAP# 102079-0) and the Massachusetts Department of Occupational Safety (DOS), # 000162.

2. Any additional suspect materials not identified in this report which become exposed during building renovation and maintenance and should be sampled and analyzed for asbestos content.

3. Areas within walls, drywall encased columns and above ceilings were inspected (if present) in accessible representative locations. However, each individual enclosed area was not inspected. Accessible areas beneath such surfaces were examined and sampled, and material quantities were estimated based on these observations.

4. Homogeneous materials observed to be non-suspect by the inspector include concrete floors, wood flooring/joists, concrete pads which hold equipment, black/brown vinyl flexible duct connectors, fiberglass matt insulation, armaflex (neoprene) insulation and wiring.

Attached please find sample analytical results. Please contact me at your convenience with questions or if you need additional information. Thank you for the opportunity to provide you with our services.

Sincerely,
FLI Environmental, Inc.

Don Corneau

EMSL Analytical, Inc.
7 Constitution Way, Suite 107, Woburn, MA 01801
Phone/Fax: (781) 933-8411 / (781) 933-8412
http://www.EMSL.com bostonlab@emsl.com

EMSL Order:	131305245
CustomerID:	FLIE62
CustomerPO:	
ProjectID:	

Attn: **Don Corneau**
FLI Environmental, Inc.
69 Bridge Street
Dedham, MA 02026

Phone:	(781) 251-0040
Fax:	(781) 251-0901
Received:	12/05/13 1:00 PM
Analysis Date:	12/6/2013
Collected:	

Project: **13-1930 / Mansfield Soldiers Hall, 2 Park Row, Mansfield MA**

Test Report: Asbestos Analysis of Bulk Materials via EPA 600/R-93/116 Method using Polarized Light Microscopy

			Non-Asbestos				Asbestos	
Sample	**Description**	**Appearance**	**%**	**Fibrous**	**%**	**Non-Fibrous**	**%**	**Type**
01A *131305245-0001*	Exterior Roof - Asphalt Roof Shingles	Black Fibrous Homogeneous	15%	Cellulose	85%	Non-fibrous (other)		**None Detected**
01B *131305245-0002*	Exterior Roof - Asphalt Roof Shingles	Black Fibrous Homogeneous	15%	Cellulose	85%	Non-fibrous (other)		**None Detected**
02A *131305245-0003*	Exterior Roof - Black Roof Paper	Black Fibrous Homogeneous	75%	Cellulose	25%	Non-fibrous (other)		**None Detected**
02B *131305245-0004*	Exterior Roof - Black Roof Paper	Black Fibrous Homogeneous	75%	Cellulose	25%	Non-fibrous (other)		**None Detected**
03A *131305245-0005*	Exterior Windows Upper - Window Glazing	White Non-Fibrous Homogeneous	5% 2%	Cellulose Glass	93%	Non-fibrous (other)		**None Detected**
03B *131305245-0006*	Exterior Windows Upper - Window Glazing	White Non-Fibrous Homogeneous			100%	Non-fibrous (other)		**None Detected**
04A *131305245-0007*	Exterior Windows Lower - Window Glazing	White Fibrous Homogeneous			98%	Non-fibrous (other)	**2%**	**Chrysotile**
04B *131305245-0008*	Exterior Windows Lower - Window Glazing	White Non-Fibrous Homogeneous			98%	Non-fibrous (other)	**2%**	**Chrysotile**

Analyst(s)

Fievel Lam (8)
Steve Grise (8)

Steve Grise, Laboratory Manager
or other approved signatory

EMSL maintains liability limited to cost of analysis. This report relates only to the samples reported and may not be reproduced, except in full, without written approval by EMSL. EMSL bears no responsibility for sample collection activities or analytical method limitations. Interpretation and use of test results are the responsibility of the client. This report must not be used by the client to claim product certification, approval, or endorsement by NVLAP, NIST or any agency of the federal government. Non-friable organically bound materials present a problem matrix and therefore EMSL recommends gravimetric reduction prior to analysis. Samples received in good condition unless otherwise noted. Estimated accuracy, precision and uncertainty data available upon request. Unless requested by the client, building materials manufactured with multiple layers (i.e. linoleum, wallboard, etc.) are reported as a single sample. Reporting limit is 1%

Samples analyzed by EMSL Analytical, Inc. Woburn, MA NVLAP Lab Code 101147-0, CT PH-0315, MA AA000188, RI AAL-107T3 and VT AL357102

Initial report from 12/06/2013 18:41:40

EMSL Analytical, Inc.
7 Constitution Way, Suite 107, Woburn, MA 01801
Phone/Fax: (781) 933-8411 / (781) 933-8412
http://www.EMSL.com bostonlab@emsl.com

EMSL Order:	131305245
CustomerID:	FLIE62
CustomerPO:	
ProjectID:	

Attn: **Don Corneau**
FLI Environmental, Inc.
69 Bridge Street
Dedham, MA 02026

Phone:	(781) 251-0040
Fax:	(781) 251-0901
Received:	12/05/13 1:00 PM
Analysis Date:	12/6/2013
Collected:	

Project: **13-1930 / Mansfield Soldiers Hall, 2 Park Row, Mansfield MA**

Test Report: Asbestos Analysis of Bulk Materials via EPA 600/R-93/116 Method using Polarized Light Microscopy

			Non-Asbestos				Asbestos
Sample	**Description**	**Appearance**	**%**	**Fibrous**	**%**	**Non-Fibrous**	**% Type**
05A *131305245-0009*	Exterior Roof Lower Flat - Flashing Material	Black Fibrous Homogeneous	40%	Cellulose	60%	Non-fibrous (other)	**None Detected**
05B *131305245-0010*	Exterior Roof Lower Flat - Flashing Material	Black Non-Fibrous Homogeneous	15%	Cellulose	85%	Non-fibrous (other)	**None Detected**
06A *131305245-0011*	Exterior Wood Shingles - Green Shingle Paper	Green Fibrous Homogeneous	85%	Cellulose	15%	Non-fibrous (other)	**None Detected**
06B *131305245-0012*	Exterior Wood Shingles - Green Shingle Paper	Green Fibrous Homogeneous	85%	Cellulose	15%	Non-fibrous (other)	**None Detected**
07A *131305245-0013*	Exterior Roof Lower Flat Bottom Layer - Asphalt Roof Shingles	Black Fibrous Homogeneous	40%	Cellulose	60%	Non-fibrous (other)	**None Detected**
07B *131305245-0014*	Exterior Roof Lower Flat Bottom Layer - Asphalt Roof Shingles	Black Fibrous Homogeneous	40%	Cellulose	60%	Non-fibrous (other)	**None Detected**
08A *131305245-0015*	Exterior Roof Lower Flat Top Layer - Asphalt Roof Shingles	Black Fibrous Homogeneous	40%	Cellulose	60%	Non-fibrous (other)	**None Detected**
08B *131305245-0016*	Exterior Roof Lower Flat Top Layer - Asphalt Roof Shingles	Black Non-Fibrous Homogeneous	40%	Cellulose	60%	Non-fibrous (other)	**None Detected**

Analyst(s)

Fievel Lam (8)
Steve Grise (8)

Steve Grise, Laboratory Manager
or other approved signatory

EMSL maintains liability limited to cost of analysis. This report relates only to the samples reported and may not be reproduced, except in full, without written approval by EMSL. EMSL bears no responsibility for sample collection activities or analytical method limitations. Interpretation and use of test results are the responsibility of the client. This report must not be used by the client to claim product certification, approval, or endorsement by NVLAP, NIST or any agency of the federal government. Non-friable organically bound materials present a problem matrix and therefore EMSL recommends gravimetric reduction prior to analysis. Samples received in good condition unless otherwise noted. Estimated accuracy, precision and uncertainty data available upon request. Unless requested by the client, building materials manufactured with multiple layers (i.e. linoleum, wallboard, etc.) are reported as a single sample. Reporting limit is 1%

Samples analyzed by EMSL Analytical, Inc. Woburn, MA NVLAP Lab Code 101147-0, CT PH-0315, MA AA000188, RI AAL-107T3 and VT AL357102

Initial report from 12/06/2013 18:41:40

THIS IS THE LAST PAGE OF THE REPORT.

STATE OF NEW HAMPSHIRE
Department of Environmental Services
Asbestos Management & Control Program
ASBESTOS Inspector
Donald Corneau

DOB: 03-12-1955
Eff. Date: 07/03/12
Exp. Date: 07/02/13
AW 000396
Craig A. Wright, Act Director
Air Resources Division

Commonwealth of Massachusetts
Department of Labor Standards
Heather E. Rowe, Director
Asbestos Inspector
DONALD CORNEAU
Eff. Date 12/13/12
Exp. Date 12/25/13
AI041886
Member of C.O.N.E.S.
NBR
13

NB-RENEW

Mainstream Engineering Corporation
Technician Certification
CERTIFIED BY EPA MAINSTREAM ENGINEERING
HVAC Technician Certification
EPA Clean Air Section 608
Program Certification Date: January 26, 1994
DONALD H. CORNEAU
03121955035386321M
has been certified as a
Type: Universal Technician
as Required by 40CFR Part 82, Subpart F

Commonwealth of Massachusetts
Department of Labor Standards
Heather E. Rowe, Director
Asbestos Management Planner
DONALD CORNEAU
Eff. Date 12/13/12
Exp. Date 12/25/13
AP041932
Member of C.O.N.E.S.
NBR
13

NB-RENEW

Texas Department of State Health Services
Asbestos Inspector
DONALD H CORNEAU
License No. 602482
Control No. 97124
Expiration Date: 10/19/2014

STATE OF TEXAS
DONALD H CORNEAU
MAINTENANCE ELECTRICIAN
LICENSE NUMBER 52608
EXPIRES 07/28/2012
TEXAS DEPARTMENT OF LICENSING AND REGULATION

Texas Department of State Health Services
Mold Assessment Technician
DONALD H CORNEAU
License No. MAT0114
Control No. 6569
Expiration Date: 1/13/2014

FLI Environmental

69 Bridge Street
Dedham, MA 02026
Phone 781.251.0040
Fax 781.251.0901

December 20, 2013

Mr. Douglas Manley
McGinley, Kalsow & Associates, Inc.
324 Broadway
Somerville, MA 02145

Re: Pre-Renovation Lead Paint Screening
Mansfield Soldiers Memorial Hall
2 Park Row, Mansfield, Massachusetts
FLI Project # 13-1930

Dear Mr. Manley:

At your request, FLI Environmental, Inc. performed a pre-demolition screening for lead based paint at the commercial building located at the above-mentioned address. The lead paint determination was conducted by Mel Blackman, MA Master Lead Inspector License 1377, utilizing an XRF analyzer.

A lead paint determination survey is a check of a limited number of surfaces at accessible sample locations. It is not a comprehensive lead inspection and cannot be used to certify compliance with the lead law. The lead paint determination was conducted utilizing a hand held RMD LPA-1 XRF (X-Ray Florescence) Lead Paint Inspection Analyzer yielding real time results. Surfaces testing above or equal to 1 milligram per square centimeter of area (> 1.0 mg/cm^2) are considered to have dangerous levels of lead.

Attached is a summary table of analytical results. Please contact me at your convenience with questions or if you need additional information. Thank you for the opportunity to provide you with our services.

Sincerely,
FLI Environmental, Inc.

Don Corneau
Project Manager

FLI Environmental

69 Bridge Street • Dedham • MA • 02026 (781) 251-0040 fax (781) 251-0901

LEAD DETERMINATION DATA SHEET

FLI Project #: 13-1930

Client: McGinley Kalsow

Date: December 19, 2013

Location: Mansfield Soldiers Memorial Hall

Lead Inspector: Mel Blackman

2 Park Row, Mansfield, MA

License #: 1377

Reading #	Location	Material	Color	Result
1	Brick Town Hall Bldg.	Metal front handrails	Black	1.0
2	Brick Town Hall Bldg.	Metal front handrails	Black	1.3
3	Brick Town Hall Bldg.	Metal window lintels	Red	0.5
4	Brick Town Hall Bldg.	Metal window lintels	Red	1.0
5	Brick Town Hall Bldg.	Rear metal door & trim	Green	0.4
6	Brick Town Hall Bldg.	Rear metal door & trim	Green	0.8
7	Brick Town Hall Bldg.	Metal window trim	Red	0.1
8	Brick Town Hall Bldg.	Metal window trim	Red	0.2
9	Brick Town Hall Bldg.	Metal door trim	Red	0.0
10	Brick Town Hall Bldg.	Metal door trim	Red	0.2
11	Brick Town Hall Bldg.	Front metal door	Green	0.0
12	Brick Town Hall Bldg.	Front metal door	Green	0.2
13	Exterior	Metal fence	Black	5.5
14	Exterior	Metal fence	Black	6.1
15	Stone & Wood Bldg. (right of brick bldg.)	Wood window trim	White	9.9
16	Stone & Wood Bldg. (right of brick bldg.)	Metal rails	Black	0.4
17	Stone & Wood Bldg. (right of brick bldg.)	Metal rails	Black	0.5
18	Stone & Wood Bldg. (right of brick bldg.)	Wood front entry door & trim	Brown	0.0
19	Stone & Wood Bldg. (right of brick bldg.)	Wood front entry door & trim	Brown	0.2
20	Stone & Wood Bldg. (right of brick bldg.)	Wood Shingles*	Brown	N/A
21	Stone & Wood Bldg. (right of brick bldg.)	Upper Wood Trim*	White	N/A
22	Stone & Wood Bldg. (right of brick bldg.)	Wood Window*	Black	N/A

* These materials/areas were inaccessible to the inspector at the time of the inspection

Cost Estimate

Soldier's Memorial Hall Building Exterior Restoration
Mansfield, MA

DD Cost Estimate
Update #1

Prepared for:-
McGinley Kalsow & Associates, Inc
Somerville, MA

Prepared by:-
D G Jones International, Inc.
3 Baldwin Green Common, Suite 202,
Woburn, MA 01801-1868
email : boston@dgjonesboston.com
Tel: 781-932-3131
Fax: 781-932-3199

March 5, 2014

SUMMARY

Gross Floor Area (in square feet)			**11,988**	
		Cost $	**$/sf**	**%**
Special Construction and Demolition		29,721	2.48	8.64%
Exterior Enclosure		251,220	20.96	73.02%
Roofing		63,080	5.26	18.34%
Sub-Total Building		**344,021**	**28.70**	**100.00%**
General Requirements/General Conditions		64,856	5.41	
Insurances		8,400	0.70	
Bonds		5,040	0.42	
Escalation to mid-point of construction 3Q2015	7.63%	32,223	2.69	
Design Contingency	7.50%	34,090	2.84	
Building Permit Fee	1.00%	4,886	0.41	
Architect & Engineer Fee	12.00%	59,222	4.94	
Construction Contingency	20.00%	98,703	8.23	
Total Cost		**651,441**	**54.34**	
Add Alternates				
Replace All Exterior Windows		354,847	29.60	
Replace Existing Shingles with New Cedar Shingles		22,561	1.88	
New Flagpole and Bracket		7,715	0.64	
Total Cost w/Add Alternates		**1,036,564**	**86.47**	

Notes

1. Brief project description:-
   - Building exterior restoration of existing Soldier's Memorial Hall.

2. The estimate is based on the following:-
   - Prevailing wage rates.
   - Competitive bid.
   - GC type contract.
   - Single contract.
   - Receipt of 5# bona fide bids.
   - Bid Date of 2Q2015.
   - 4 month construction period.

3. The floor areas are based on the following:-
   - Measurement is taken to the inside face of the exterior wall, measured through all stair wells, elevator shafts and ducts.
   - Atriums/large open voids are excluded.

4. Story heights:-
   - Varies.

5. General Requirements for this project are listed and priced later in the document.

6. Special Conditions for this project are included with General Requirements

7. Escalation to mid-point of construction is compounded per annum at 5% (3Q2015):-
   - Note: Escalation is taken on the sum of Sub-Total Construction and General Requirements.

8. Design contingency is an allowance for future design modifications/additions, which alter the cost of the building as the design progresses, this percentage reduces as the design develops. It is based on a percentage of the sum of Sub-Total Construction, General Requirements, Special Conditions and Escalation. For this level of estimate the following has been included:-
   - 7.50%

9. Construction contingency is an allowance for scope/design modifications made by the owner during construction and also for any unforeseen circumstances. It is based on a percentage of the sum of Sub-Total Construction, General Requirements, Special Conditions, Escalation and Design Contingency. The following has been included:-
   - 20.00%

Notes (Cont'd)

10. This estimate has been prepared from the following design information:-
    - Drawings package dated January 03, 2014.
    - Emails and telephone conversations with MKA.

11. The estimate includes the following:-
    - Hazardous Material Removal.
    - See Estimate.

12. The estimate excludes the following:-
    - Utility company backcharges.
    - Sales tax.

13. Allowances:-
    - Removal of asbestos containing glazing putty.
    - See Estimate.

14. Assumptions:-
    - See Estimate.

15. Estimates by other firms:-
    - None.

Notes (Cont'd)

16. Common abbreviations included in this estimate:-
    - cd = construction documents.
    - cf = cubic foot.
    - cy = cubic yard.
    - dd = design development.
    - dpm = damproof membrane.
    - ea = each.
    - EO = Extra Over.
    - flr = floor.
    - lb = pound.
    - lf = linear foot.
    - ls = lump sum.
    - ly = linear yard.
    - mg = make good.
    - opg = opening.
    - rc = reinforced concrete.
    - rsr = riser.
    - sd = schematic design.
    - sf = square foot.
    - sy = square yard.
    - tn = ton.

17. Builders work in connection (BWIC) with conveying, mechanical and electrical systems includes the following:-
    - Drilling and coring.
    - Chasing.
    - Cutting and patching.

Description	Qty	Unit	Rate	Amount	Total
Special Construction and Demolition					
Selective Demolition					
Remove & dispose exterior wall covering:-					
Wood shingles	2,307	sf	1.64	3,783	
Wood shingles at dormers (North)	190	sf	1.64	312	
Wood shingles at dormers (South)	197	sf	1.64	323	
Wood shingles (small room at West)	101	sf	1.64	166	
Wood shingles at eaves, 2' 0" deep (North)	36	lf	3.28	118	
Wood shingles at dormers, 1' 0" deep (North)	15	lf	1.64	25	
Wood shingles at eaves, 1' 0" deep (South)	56	lf	1.64	92	
Remove & dispose wood sills & apron at dormer:-					
Window type M, 4" high	7	lf	2.82	20	
Window type N, 4" high	7	lf	2.82	20	
Remove & dispose exterior door & window:-					
Door & frame #110 - (3' 4" x 6' 9")	1	ea	112.39	112	
Type A #001 - (6sf, 10lf)	1	ea	60.00	60	
Type A #004 - (6sf, 10lf)	1	ea	60.00	60	
Type A #005 - (6sf, 10lf)	1	ea	60.00	60	
Type A #006 - (6sf, 10lf)	1	ea	60.00	60	
Type A #007 - (6sf, 10lf)	1	ea	60.00	60	
Remove & dispose roof:-					
Asphalt singles	6,537	sf	2.00	13,074	
Asphalt singles (small roof at West)	78	sf	2.00	156	
Gutters	152	lf	2.85	433	
Down spouts	180	lf	2.50	450	
Remove & dispose other:-					
Flagpole & bracket at eave	1	ea	225.00	225	
Remove extg vines from walls	757	sf	0.85	643	
General					
Landscape repairs, allow	1	ls	5,000.00	5,000	
Miscellaneous demolition/alteration	1	ls	1,767.63	1,768	
Remove rubbish off site	1	ls	2,701.95	2,702	29,721
Special Construction and Demolition	**Total**			**29,721**	**29,721**
Exterior Enclosure					
Exterior Wall					
Masonry wall:-					
Cut & repoint masonry wall	3,602	sf	24.00	86,448	
Clean masonry wall	3,602	sf	4.65	16,749	
Retaining wall:-					
Rebuild existing stone wall at East, (2' 4" thick x 3' 8" high)	4	lf	311.95	1,248	
Rebuild existing stone wall at West, (2' 4" thick x 3' 8" high)	8	lf	311.95	2,496	
Cut & repoint wall	330	sf	24.00	7,920	
Clean stone masonry retaining wall at East, both sides & top	435	sf	4.65	2,023	

Description	Qty	Unit	Rate	Amount	Total
Clean stone masonry retaining wall at West, both sides & top	435	sf	4.65	2,023	
Masonry plant stand:-					
Clean (2) stone masonry plant stands at North, (3) sides & top	110	sf	4.65	512	
Clean chimney	83	sf	4.65	386	
Exterior wall shingles:-					
Wood shingles & stain	2,307	sf	9.00	20,763	
Wood shingles at dorm & stain (North)	190	sf	9.00	1,710	
Wood shingles at dorm & stain (South)	197	sf	9.00	1,773	
Wood shingles & stain at eaves, 2' 0" deep (North)	36	lf	23.40	842	
EO - Wood shingles trim at eaves (North)	46	lf	6.54	301	
EO - Wood shingles trim at eaves, curved (North)	36	lf	7.54	271	
Wood shingles & stain at dorm, 1' 0" deep (North)	15	lf	11.70	176	
EO - Wood shingles trim at dormers (North)	28	lf	6.54	183	
EO - Wood shingles trim at dormers, curved (North)	15	lf	7.54	113	
EO - Wood shingles trim at eaves (South)	29	lf	6.54	190	
Wood shingles & stain at eaves, 1' 0" deep (South)	56	lf	11.70	655	
EO - Wood shingles trim at eaves (South)	69	lf	6.54	451	
EO - Wood shingles trim at eaves, curved (South)	56	lf	7.54	422	
Trim/soffit:-					
Prep & paint extg wood molding at shingle skirt	215	lf	5.00	1,075	
Prep & paint extg wood fascia	161	lf	5.00	805	
Prep & paint extg wood fascia at dormers	64	lf	5.00	320	
Prep & paint extg wood soffit (6" wide)	18	lf	5.49	99	
Prep & paint extg wood soffit at dormer (1' 4" wide)	64	lf	9.00	576	
Prep & paint extg wood soffit (1' 5" wide)	50	lf	9.00	450	
Prep & paint extg wood soffit (2' 0" wide)	143	lf	12.00	1,716	
Prep & paint extg wood soffit below window type H	32	sf	6.00	192	
Prep & paint extg wood rake trim (8" wide)	52	lf	6.50	338	
Prep & paint extg wood rake trim (1' 0" wide)	44	lf	8.00	352	
Prep & paint extg wood brackets (6" x 1' 9" h)	4	ea	16.00	64	
Prep & paint extg wood brackets (1' 0" x 3' 8" h)	6	ea	35.00	210	
Prep & paint extg wood brackets (1' 0" x 6' 7" h)	2	ea	50.00	100	
Prep & paint extg steel handrails & posts (3' 0" high)	57	lf	12.00	684	
Replace wood rake trim & paint (1' 0" wide)	8	lf	16.00	128	
Extg sign "Superintendent of Schools"	1	ea		ETR	154,763
Exterior Window					
New windows:-					
Type A #001 - (6sf, 10lf)	1	ea	680.84	681	
Type A #004 - (6sf, 10lf)	1	ea	680.84	681	
Type A #005 - (6sf, 10lf)	1	ea	680.84	681	
Type A #006 - (6sf, 10lf)	1	ea	680.84	681	
Type A #007 - (6sf, 10lf)	1	ea	680.84	681	
Restore existing windows:-					
Remove existing storm windows	1,126	sf	1.00	1,126	
Contractor shall remove asbestos containing glazing putty, allow	1,156	sf	12.00	13,872	
Sash shall then be removed from site where glass will be remove	1,126	sf	3.00	3,378	
Paint stripped from sashes	1,126	sf	2.50	2,815	
Existing muntins & rails be repaired as required	1,126	sf	15.00	16,890	
Sash shall be reglazed, primed & painted, interior & exterior side	1,126	sf	21.00	23,646	

Description	Qty	Unit	Rate	Amount	Total
Reinstall with new sash cords	1,126	sf	4.00	4,504	
Existing sash locks & pulleys shall be restored	1,126	sf	3.50	3,941	
Existing parting beads shall be replaced	1,126	sf	3.00	3,378	
Prep & paint all exterior trim	1,126	sf	4.00	4,504	
Provide & install new storm windows	1,126	sf	9.00	10,134	
Restore glazed door transom (Window #115)	26	sf		Included above	
Granite sill to window:-					
Granite sill to window type A, 8" high (ETR)	24	lf		ETR	
Granite sill to window type A1, 8" high (ETR)	10	lf		ETR	
Granite sill to window type A2, 8" high, (ETR)	14	lf		ETR	
Granite sill to window type B, 8" high (ETR)	8	lf		ETR	
Granite sill to window type C, 8" high (ETR)	23	lf		ETR	
Granite sill to window type D, 8" high (ETR)	32	lf		ETR	
Granite sill to window type E, 8" high (ETR)	11	lf		ETR	
Granite sill to window type F, 8" high (ETR)	16	lf		ETR	
Granite sill to window type G, 8" high (ETR)	11	lf		ETR	
Wood sills & apron at dormer:-					
Window type M, 4" high	7	lf	20.47	143	
Window type N, 4" high	7	lf	20.47	143	
Prep & paint extg window sills:-					
Wood sill to window type H, 8" high	21	lf	6.50	137	
Wood sill to window type J, 2" high	31	lf	5.00	155	
Wood sill to window type K, 2" high	6	lf	5.00	30	
Sealant:-					
Sealant to new windows (both sides) including all prep work	100	lf	6.35	635	92,835
Exterior Door					
New Door:-					
Door & frame #110 - (3' 4" x 6' 9")	1	ea	1,780.00	1,780	
Sealant:-					
Sealant to new door (both sides) including all prep work	40	lf	6.35	254	
Existing Door #101:-					
Replace bottom rails	7	lf	35.00	245	
Restore existing transparent finish	57	sf	6.00	342	
Restore existing DL door hardware	1	ea	1,000.00	1,000	3,621
Exterior Enclosure	**Total**			**251,220**	**251,220**
Roofing					
Roof Coverings					
Roof covering:-					
Asphalt singles	6,537	sf	5.00	32,685	
Asphalt singles (small roof at West)	78	sf	5.00	390	
#30 felt paper	6,537	sf	1.25	8,171	
#30 felt paper (small roof at West)	78	sf	1.25	98	
Replace roof plywood sheathing (allow 10%)	662	sf	2.75	1,821	
Connect new roof to existing building addition roof	25	lf	10.00	250	

Description	Qty	Unit	Rate	Amount	Total
Roof accessories:-					
Drip edge	152	lf	7.00	1,064	
Drip edge at dormer	66	lf	7.00	462	
Gutters:-					
20oz. copper gutters	152	lf	26.00	3,952	
20oz. copper down spouts	180	lf	28.00	5,040	
Ice & water shield at:-					
Rakes, ridges & valleys (3' 0" wide strip)	1,019	lf	3.75	3,821	
Dormer roofs (100% coverage)	650	sf	1.75	1,138	
Dormer sidewalls (100% coverage)	387	sf	1.75	677	
Flashing:-					
Flashing at roof	56	lf	12.50	700	
Flashing at chimney	22	lf	12.50	275	
Flashing at dormer	124	lf	12.50	1,550	
Sealant:-					
Sealant to roof	420	lf	2.35	987	63,080
Roofing	**Total**			**63,080**	**63,080**

Description	Qty	Unit	Rate	Amount	
General Requirements					
Field personnel					
Field personnel:-					
Project manager	1	week	3,450.00	2,990	
Project superintendent	9	week	2,975.00	25,783	
Field engineer	2	week	2,675.00	4,637	
MEP co-ordinator	0	week	2,675.00	0	
Labourer	2	week	2,350.00	4,073	
Main office staff	2	week	2,675.00	5,350	42,833
Insurance & Bond Cost					
Insurances (includes):-			Included on Summary		
Builders risk					
General liability					
Vehicle liability					
Pollution liability					
Workers compensation			Included in Labor		
Umbrella coverage					
Performance bond.			Included on Summary		0
Temporary Utilities & Services					
Temporary utilities & Services:-					
Temporary water & sewer service & distribution	17	week	15.00	260	
Temporary water consumed	17	week	15.00	260	
Temporary toilet rental & service	17	week	15.00	260	
Temporary electricity consumed	17	week	15.00	260	
Temporary heating system	17	week	15.00	260	
Temporary heating fuel consumed	17	week	15.00	260	
Emergency diesel generator fuel consumed	17	week	15.00	260	1,820
Additional Categories					
Preparation of progress schedules.	4	mth	50.00	200	
Compilation/preparation of site survey data.	1	ls	500.00	500	
Preparation of shop drawings.	1	ls	1,250.00	1,250	
Construction photographs.	4	mth	75.00	300	
Temporary construction.	17	week	50.00	867	
Construction aids (safety nets, personnel protection equipment, partial scaffolding, etc)	17	week	75.00	1,300	
Barriers and enclosures.	17	week	50.00	867	
Security.	4	mth	500.00	2,000	
Access roads.	17	week	25.00	433	
Temporary controls.	17	week	25.00	433	
Project signs.	4	mth	150.00	600	
Field offices and sheds	4	mth	500.00	2,000	
Field office expenses.	17	week	150.00	2,600	
Equipment rental	1	ls	500.00	500	
Snow removal	6.00	ea	350.00	2,100	
Winter protection	1.00	ls	1,500.00	1,500	
Interim cleaning	17	week	79.39	1,376	
Final cleaning	1	ls	1,376.08	1,376	20,202
General Requirements	**Total**			**64,856**	**64,856**

Gross Floor Area	**GFA (sf)**	**Perimeter (lf)**
Basement	3,409	260
First Floor	3,409	260
Second Floor	2,606	230
Attic Floor	2,564	226
Total	**11,988**	

Description	Qty	Unit	Rate	Amount Add	Amount Deduct
Add Alternate Summary					
Replace All Exterior Windows				**354,847**	
Replace Existing Shingles with New Cedar Shingles				**22,561**	
New Flagpole and Bracket				**7,715**	
Replace All Exterior Windows					
Deduct					
Restore existing windows:-					
Remove existing storm windows	1,126	sf	1.00		1,126
Contractor shall remove asbestos containing glazing putty, allow	1,156	sf	12.00	Included in Base Bid	
Sash shall then be removed from site where glass will be remove	1,126	sf	3.00		3,378
Paint stripped from sashes	1,126	sf	2.50		2,815
Existing muntins & rails be repaired as required	1,126	sf	15.00		16,890
Sash shall be reglazed, primed & painted, interior & exterior side	1,126	sf	21.00		23,646
Reinstall with new sash cords	1,126	sf	4.00		4,504
Existing sash locks & pulleys shall be restored	1,126	sf	3.50		3,941
Existing parting beads shall be replaced	1,126	sf	3.00		3,378
Prep & paint all exterior trim	1,126	sf	4.00		4,504
Provide & install new storm windows	1,126	sf	9.00		10,134
Add					
Remove & dispose windows:-					
Type A #001 - (6sf, 10lf)	1	ea	Included in Base Bid		
Type A1 #002 - (6sf, 10lf)	1	ea	60.00	60	
Type A1 #003 - (6sf, 10lf)	1	ea	60.00	60	
Type A #004 - (6sf, 10lf)	1	ea	Included in Base Bid		
Type A #005 - (6sf, 10lf)	1	ea	Included in Base Bid		
Type A #006 - (6sf, 10lf)	1	ea	Included in Base Bid		
Type A #007 - (6sf, 10lf)	1	ea	Included in Base Bid		
Type A2 #008 - (6sf, 10lf)	1	ea	60.00	60	
Type A2 #009 - (6sf, 10lf)	1	ea	60.00	60	
Type A2 #010 - (6sf, 10lf)	1	ea	60.00	60	
Type B #101 - (15sf, 16lf)	1	ea	150.00	150	
Type C #102 - (71sf, 33lf)	1	ea	710.00	710	
Type D #103 - (35sf, 23lf)	1	ea	350.00	350	
Type D #104 - (35sf, 23lf)	1	ea	350.00	350	
Type D #105 - (35sf, 23lf)	1	ea	350.00	350	
Type E #106 - (26sf, 21lf)	1	ea	260.00	260	
Type F #107 - (36sf, 25lf)	1	ea	360.00	360	
Type F #108 - (36sf, 25lf)	1	ea	360.00	360	
Type F #109 - (36sf, 25lf)	1	ea	360.00	360	
Type E #110 - (26sf, 21lf)	1	ea	260.00	260	
Type D #111 - (35sf, 23lf)	1	ea	350.00	350	
Type D #112 - (35sf, 23lf)	1	ea	350.00	350	
Type C #113 - (71sf, 33lf)	1	ea	710.00	710	
Type B #114 - (15sf, 16lf)	1	ea	150.00	150	
Type P #115 - (26sf, 20lf)	1	ea	260.00	260	
Type P1 #116 - (21sf, 18lf)	1	ea	210.00	210	
Type G #201 - (138sf, 46lf)	1	ea	1,380.00	1,380	
Type H #202 - (57sf, 32lf)	1	ea	570.00	570	
Type J #203 - (43sf, 27lf)	1	ea	430.00	430	

Description	Qty	Unit	Rate	Amount Add	Amount Deduct
Type J #204 - (43sf, 27lf)	1	ea	430.00	430	
Type K #205 - (34sf, 23lf)	1	ea	340.00	340	
Type J #206 - (43sf, 27lf)	1	ea	430.00	430	
Type J #207 - (43sf, 27lf)	1	ea	430.00	430	
Type H #208 - (57sf, 32lf)	1	ea	570.00	570	
Type M #301 - (23sf, 20lf)	1	ea	230.00	230	
Type N #302 - (19sf, 18lf)	1	ea	190.00	190	
Type N #303 - (19sf, 18lf)	1	ea	190.00	190	
Type M #304 - (23sf, 20lf)	1	ea	230.00	230	
New Windows:-					
Type A #001 - (6sf, 10lf)	1	ea	Included in Base Bid		
Type A1 #002 - (6sf, 10lf)	1	ea	531.24	531	
Type A1 #003 - (6sf, 10lf)	1	ea	531.24	531	
Type A #004 - (6sf, 10lf)	1	ea	Included in Base Bid		
Type A #005 - (6sf, 10lf)	1	ea	Included in Base Bid		
Type A #006 - (6sf, 10lf)	1	ea	Included in Base Bid		
Type A #007 - (6sf, 10lf)	1	ea	Included in Base Bid		
Type A2 #008 - (6sf, 10lf)	1	ea	680.84	681	
Type A2 #009 - (6sf, 10lf)	1	ea	680.84	681	
Type A2 #010 - (6sf, 10lf)	1	ea	680.84	681	
Type B #101 - (15sf, 16lf)	1	ea	2,988.66	2,989	
Type C #102 - (71sf, 33lf)	1	ea	10,930.49	10,930	
Type D #103 - (35sf, 23lf)	1	ea	5,039.96	5,040	
Type D #104 - (35sf, 23lf)	1	ea	5,039.96	5,040	
Type D #105 - (35sf, 23lf)	1	ea	5,039.96	5,040	
Type E #106 - (26sf, 21lf)	1	ea	4,519.86	4,520	
Type F #107 - (36sf, 25lf)	1	ea	13,145.19	13,145	
Type F #108 - (36sf, 25lf)	1	ea	13,145.19	13,145	
Type F #109 - (36sf, 25lf)	1	ea	13,145.19	13,145	
Type E #110 - (26sf, 21lf)	1	ea	4,519.86	4,520	
Type D #111 - (35sf, 23lf)	1	ea	5,039.96	5,040	
Type D #112 - (35sf, 23lf)	1	ea	5,039.96	5,040	
Type C #113 - (71sf, 33lf)	1	ea	10,930.49	10,930	
Type B #114 - (15sf, 16lf)	1	ea	2,988.66	2,989	
Type P #115 - (26sf, 20lf)	1	ea	15,984.83	15,985	
Type P1 #116 - (21sf, 18lf)	1	ea	15,840.40	15,840	
Type G #201 - (138sf, 46lf)	1	ea	40,089.00	40,089	
Type H #202 - (57sf, 32lf)	1	ea	11,599.26	11,599	
Type J #203 - (43sf, 27lf)	1	ea	8,200.79	8,201	
Type J #204 - (43sf, 27lf)	1	ea	8,200.79	8,201	
Type K #205 - (34sf, 23lf)	1	ea	6,345.51	6,346	
Type J #206 - (43sf, 27lf)	1	ea	8,200.79	8,201	
Type J #207 - (43sf, 27lf)	1	ea	8,200.79	8,201	
Type H #208 - (57sf, 32lf)	1	ea	11,599.26	11,599	
Type M #301 - (23sf, 20lf)	1	ea	12,691.68	12,692	
Type N #302 - (19sf, 18lf)	1	ea	3,972.08	3,972	
Type N #303 - (19sf, 18lf)	1	ea	3,972.08	3,972	
Type M #304 - (23sf, 20lf)	1	ea	12,691.68	12,692	
Sealant:-					
Sealant to new windows (both sides) including all prep work	1,470	lf	6.35	9,335	

Description	Qty	Unit	Rate	Amount Add	Amount Deduct
Sub-Totals				**292,802**	**74,316**
Net Add				**218,486**	
General Requirements/General Conditions	2.00%			4,370	
Insurances	2.00%			4,457	
Bonds	1.20%			2,728	
Escalation to mid-point of construction 3Q2015	7.63%			17,552	
Design Contingency	7.50%			18,569	
Building Permit Fee	1.00%			2,662	
Architect & Engineer Fee	12.00%			32,259	
Construction Contingency	20.00%			53,765	
Replace All Exterior Windows	***Total - Gross Add***			**354,847**	
Replace Existing Shingles with New Cedar Shingles					
Deduct					
Roof covering:-					
Asphalt singles	6,537	sf	5.00		32,685
Asphalt singles (small roof at West)	78	sf	5.00		390
Add					
Roof covering:-					
Cedar shingles	6,537	sf	7.10	46,413	
Cedar shingles (small roof at West)	78	sf	7.10	554	
Sub-Totals				**46,967**	**33,075**
Net Add				**13,892**	
General Requirements/General Conditions	2.00%			278	
Insurances	2.00%			283	
Bonds	1.20%			173	
Escalation to mid-point of construction 3Q2015	7.63%			1,116	
Design Contingency	7.50%			1,181	
Building Permit Fee	1.00%			169	
Architect & Engineer Fee	12.00%			2,051	
Construction Contingency	20.00%			3,418	
Replace Existing Shingles with New Cedar Shingles	***Total - Gross Add***			**22,561**	
New Flagpole and Bracket					
Add					
Blocking/support for flagpole	1	ls	500.00	500	
Flagpole 20' high w/bracket	1	ea	4,250.00	4,250	

Description	Qty	Unit	Rate	Amount Add	Amount Deduct
Sub-Totals				**4,750**	**0**
Net Add				**4,750**	
General Requirements/General Conditions	2.00%			95	
Insurances	2.00%			97	
Bonds	1.20%			59	
Escalation to mid-point of construction 3Q2015	7.63%			382	
Design Contingency	7.50%			404	
Building Permit Fee	1.00%			58	
Architect & Engineer Fee	12.00%			701	
Construction Contingency	20.00%			1,169	
New Flagpole and Bracket	***Total - Gross Add***			**7,715**	

Original Drawings

This is one sheet of a set of drawings referred to in our contract dated Sept. 1, 1899.
Giles & Co

LIBRARY AND SOLDIERS HALL
MANSFIELD MASS.

PEABODY & STEARNS
Architects

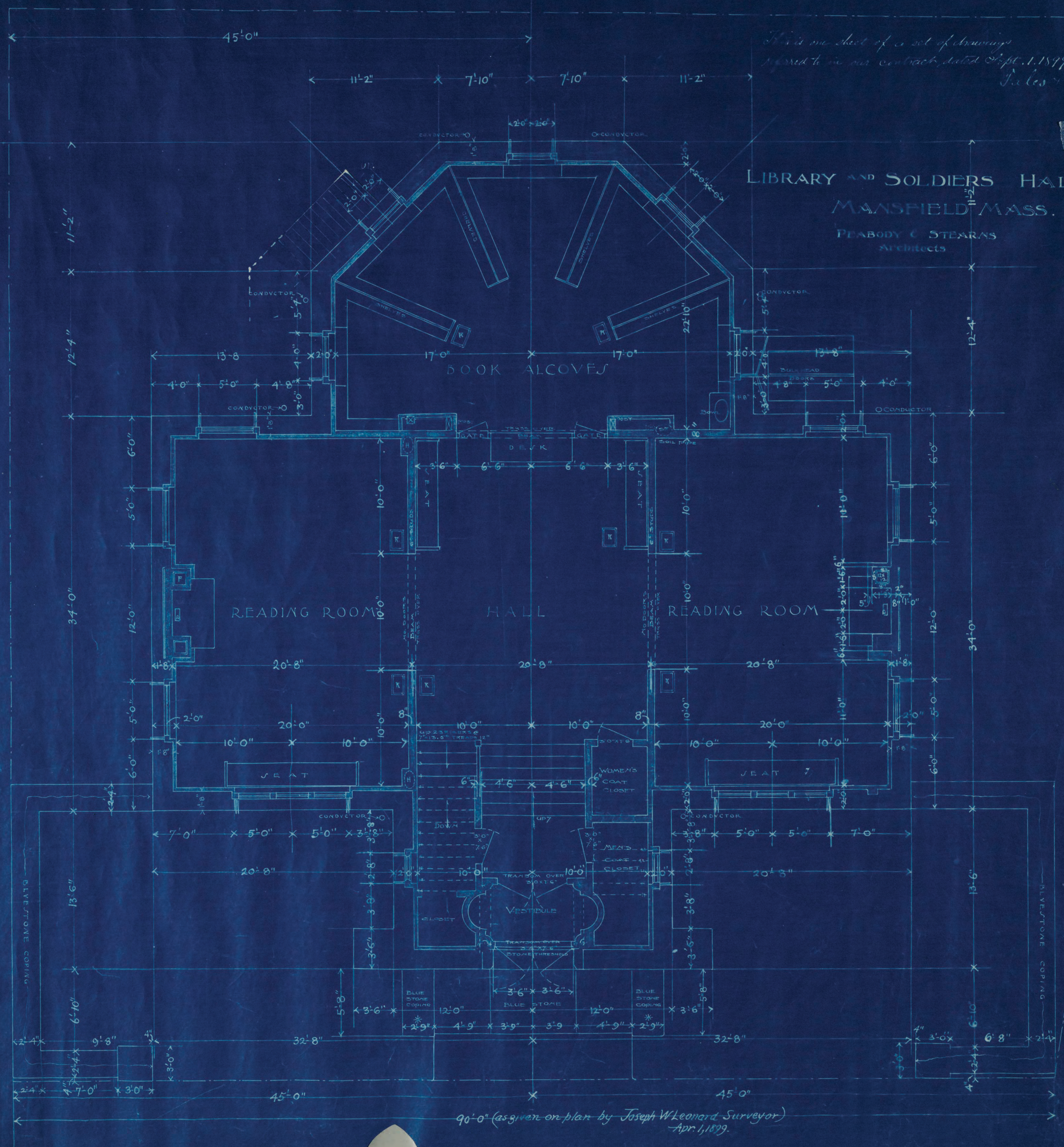

FIRST FLOOR PLAN
SCALE - 1/4 INCH = 1 FOOT

LIBRARY AND SOLDIERS HALL
MANSFIELD MASS.

PEABODY & STEARNS
Architects

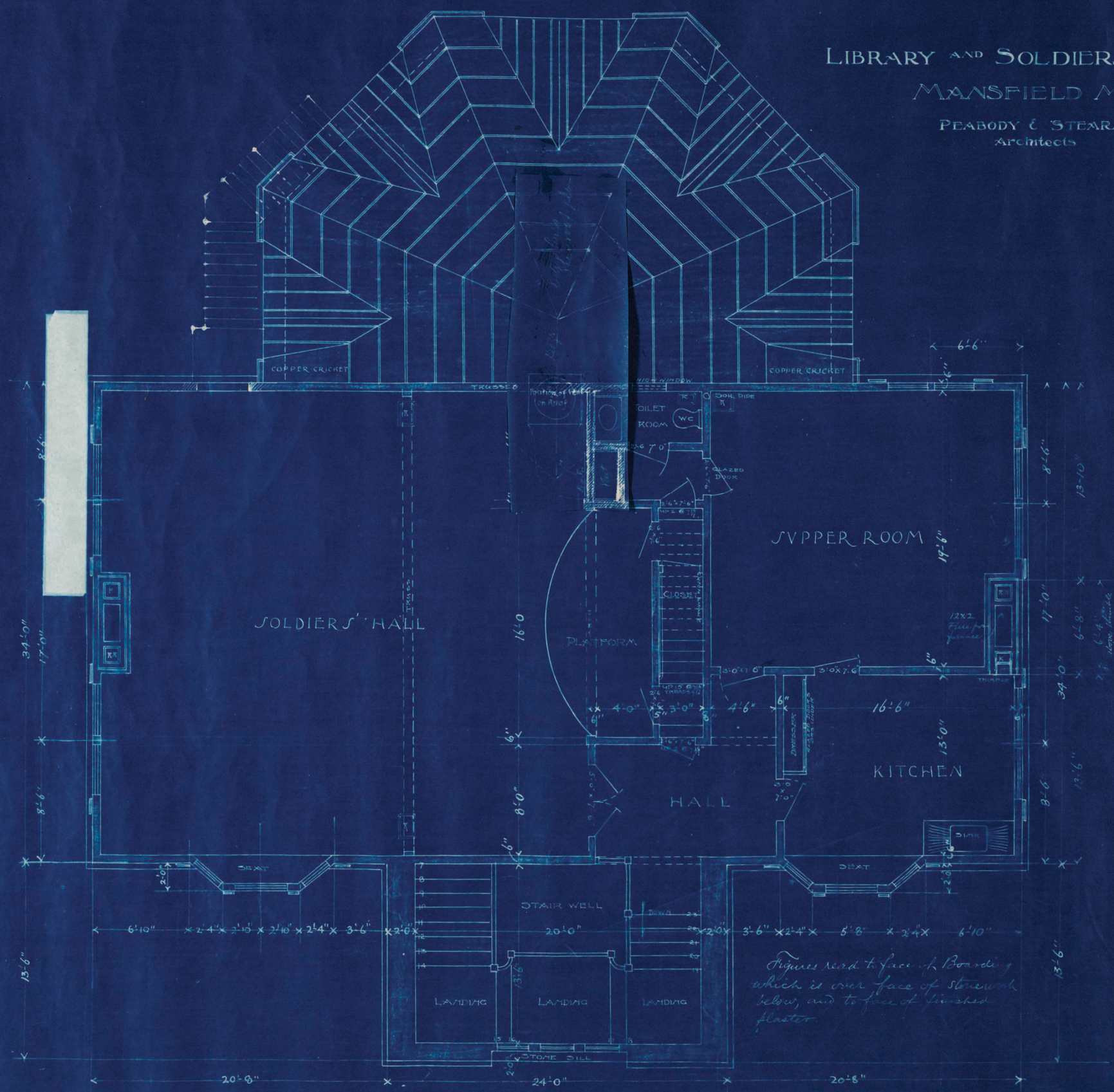

SECOND FLOOR PLAN

SCALE:- 1/4 INCH = 1 FOOT

3

This is one sheet of a set of drawings referred to in our contract dated Sept. 1, 1877.
Peabody & Stearns

LIBRARY AND SOLDIERS HALL

MANSFIELD MASS.

PEABODY & STEARNS
Architects

NORTH ELEVATION

SCALE:- 1/4 INCH = 1 FOOT

4

LIBRARY AND SOLDIERS HALL

MANSFIELD MASS.

PEABODY & STEARNS
Architects

SOUTH ELEVATION

SCALE:— ¼ INCH = 1 FOOT

7

LIBRARY AND SOLDIERS' HALL
MANSFIELD MASS.

PEABODY & STEARNS
Architects

WEST ELEVATION

SCALE:- $\frac{1}{4}$ INCH = 1 FOOT

5

Existing Condition Drawings

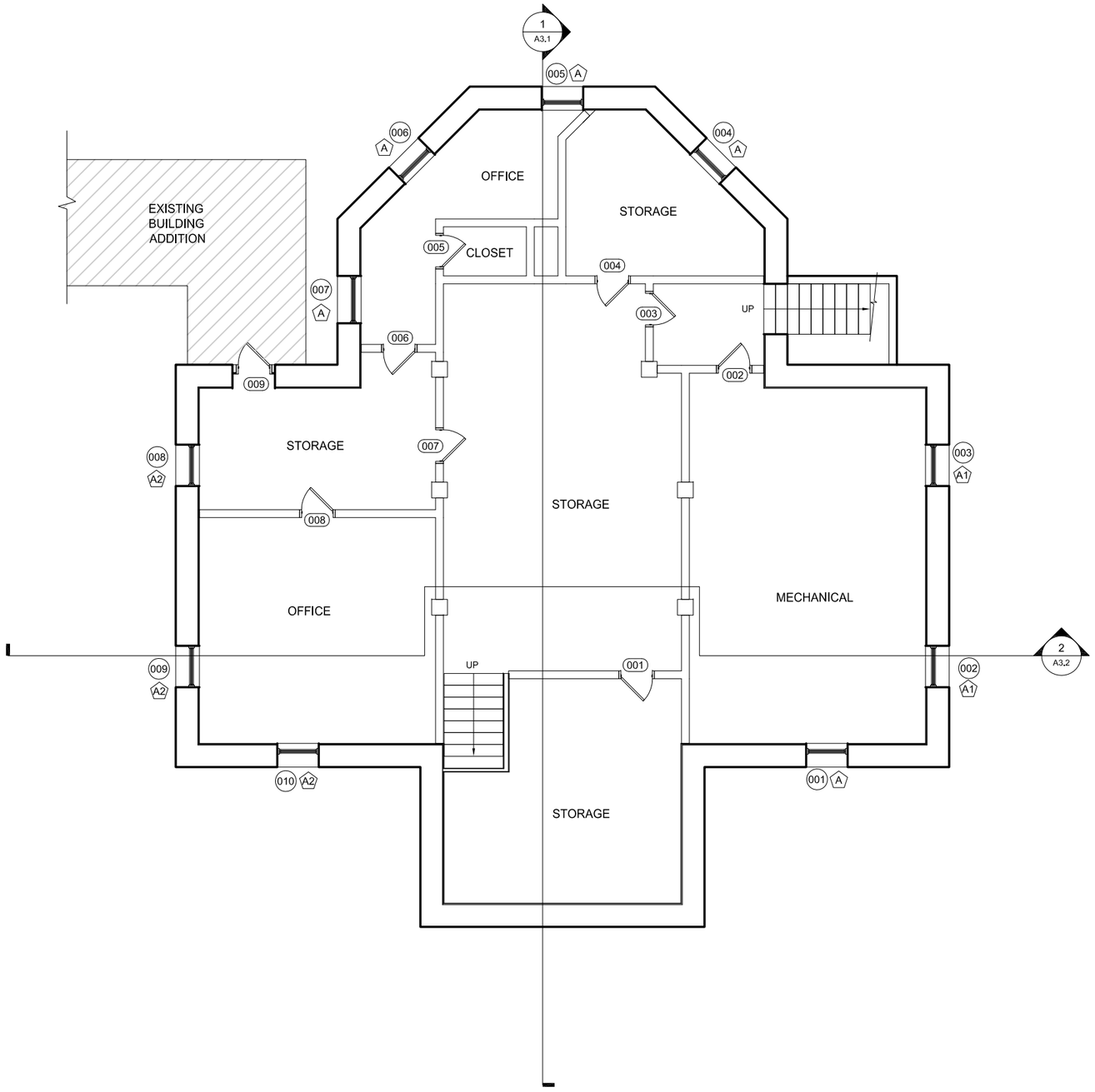

1 BASEMENT FLOOR PLAN
3/32"=1'-0"

N

Town of
Mansfield, MA

Soldier's Memorial Hall

2 Park Row
Mansfield, MA 02048
Building Exterior Restoration

Date:	1/3/2014
Drawn By:	FJM
Reviewed By:	DLM
Project No:	1682.00

McGinley Kalsow & Associates, Inc.
ARCHITECTS & PRESERVATION PLANNERS
324 Broadway, P.O. Box 45248
Somerville, MA 02145
617.625.8901 - www.mcginleykalsow.com

BASEMENT
FLOOR PLAN

A1.0

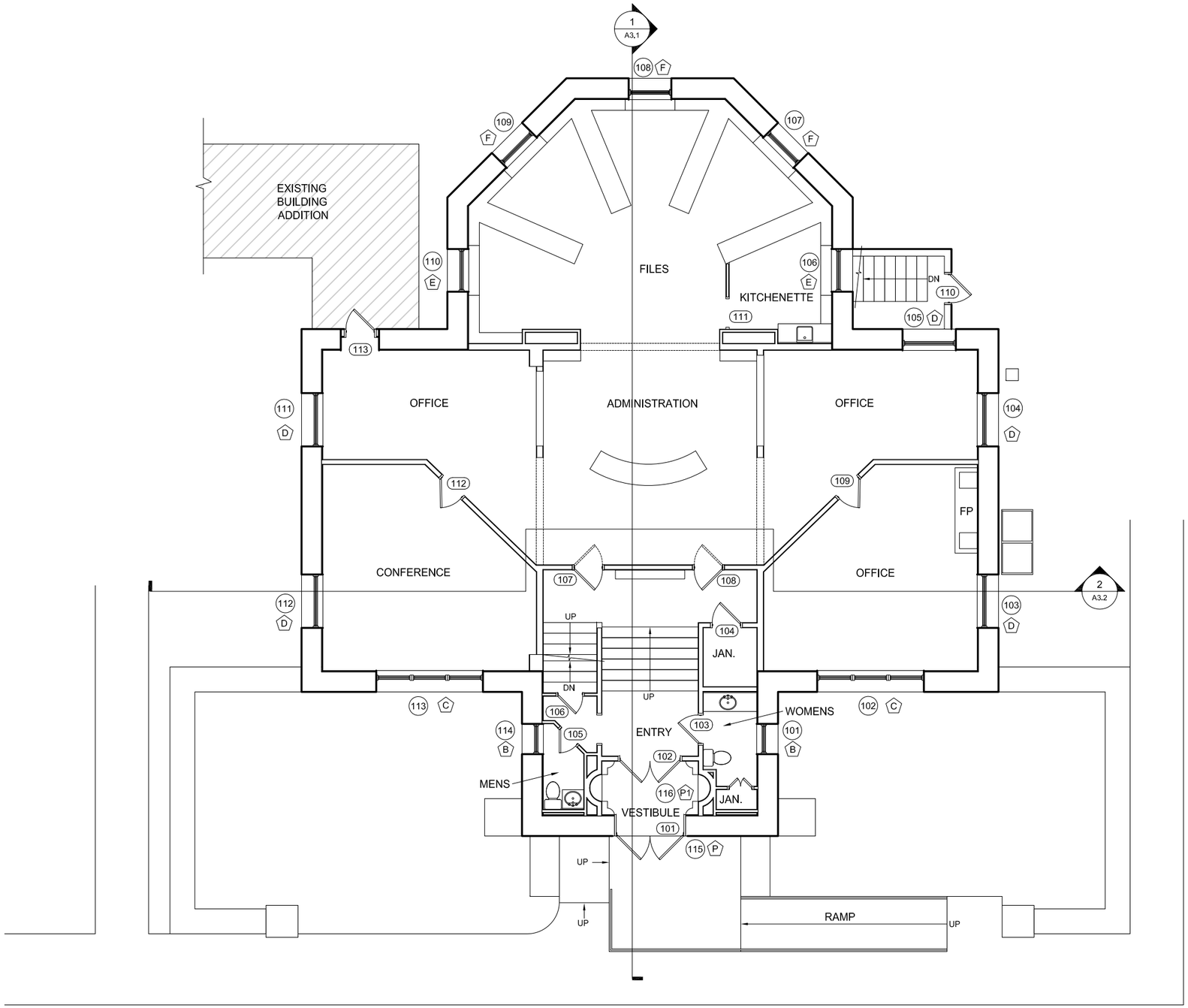

2 FIRST FLOOR PLAN
3/32"=1'-0"

Town of
Mansfield, MA

Soldier's Memorial Hall

2 Park Row
Mansfield, MA 02048
Building Exterior Restoration

Date:	1/3/2014
Drawn By:	FJM
Reviewed By:	DLM
Project No:	1682.00

McGinley Kalsow & Associates, Inc.
ARCHITECTS & PRESERVATION PLANNERS
324 Broadway, P.O. Box 45248
Somerville, MA 02145
617.625.8901 - www.mcginleykalsow.com

FIRST FLOOR PLAN

A1.1

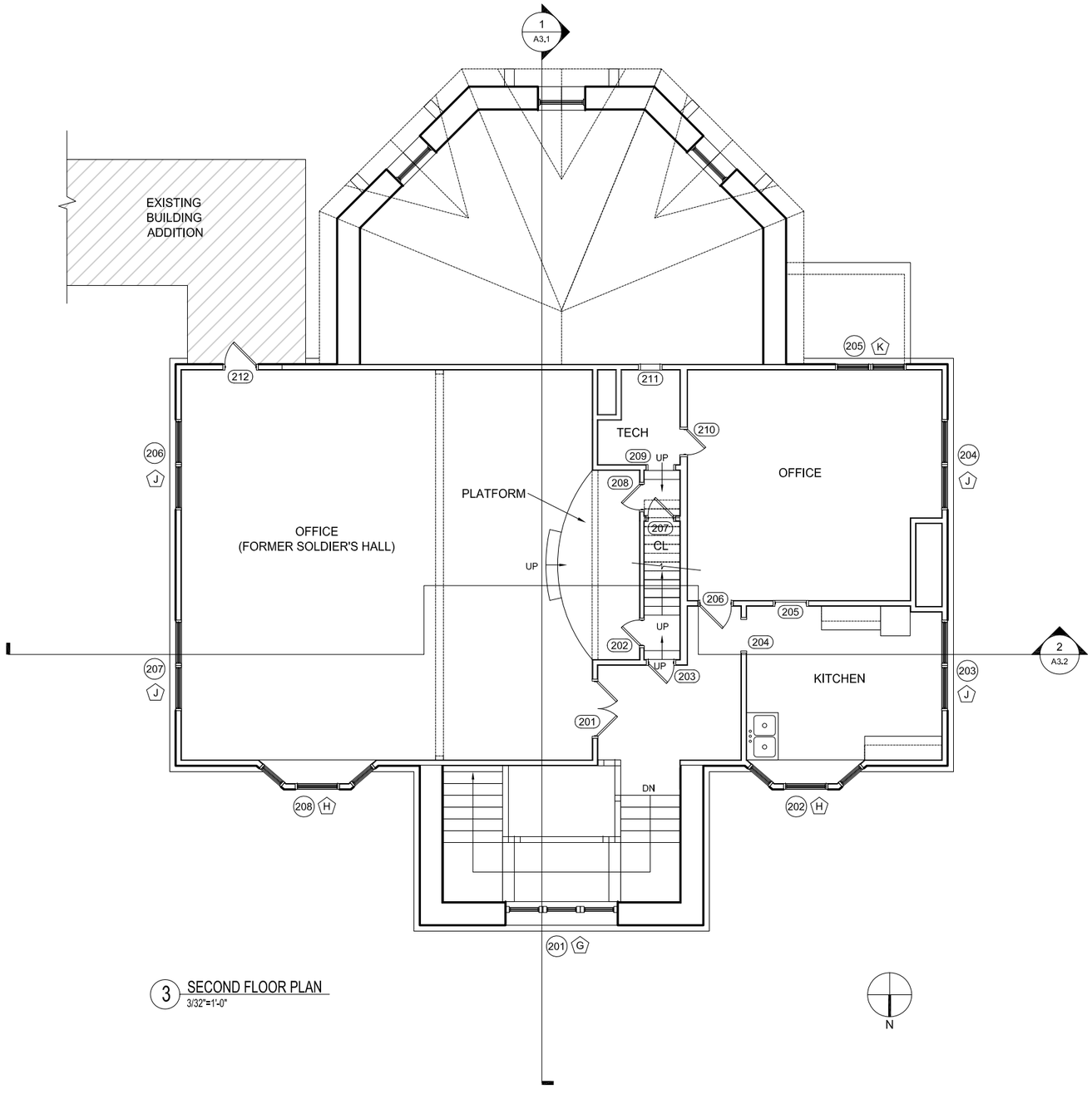

3 SECOND FLOOR PLAN
3/32"=1'-0"

Town of
Mansfield, MA

Soldier's Memorial Hall

2 Park Row
Mansfield, MA 02048
Building Exterior Restoration

Date:	1/3/2014
Drawn By:	FJM
Reviewed By:	DLM
Project No:	1682.00

McGinley Kalsow & Associates, Inc.
ARCHITECTS & PRESERVATION PLANNERS
324 Broadway, P.O. Box 45248
Somerville, MA 02145
617.625.8901 - www.mcginleykalsow.com

SECOND
FLOOR PLAN

A1.2

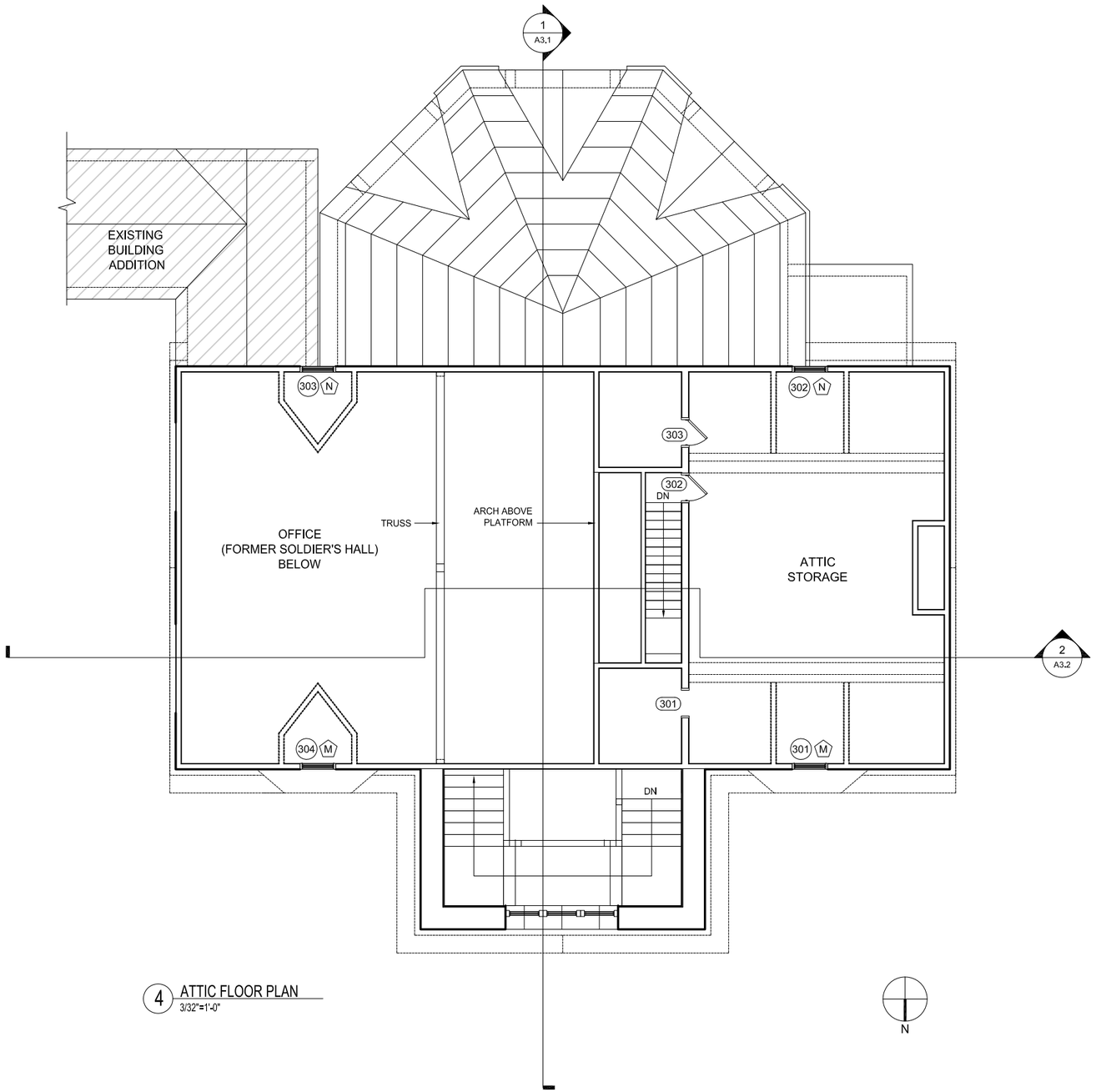

4 ATTIC FLOOR PLAN
3/32"=1'-0"

Town of
Mansfield, MA

Soldier's Memorial Hall

2 Park Row
Mansfield, MA 02048
Building Exterior Restoration

Date:	1/3/2014
Drawn By:	FJM
Reviewed By:	DLM
Project No:	1682.00

McGinley Kalsow & Associates, Inc.
ARCHITECTS & PRESERVATION PLANNERS
324 Broadway, P.O. Box 45248
Somerville, MA 02145
617.625.8901 - www.mcginleykalsow.com

ATTIC FLOOR PLAN

A1.3

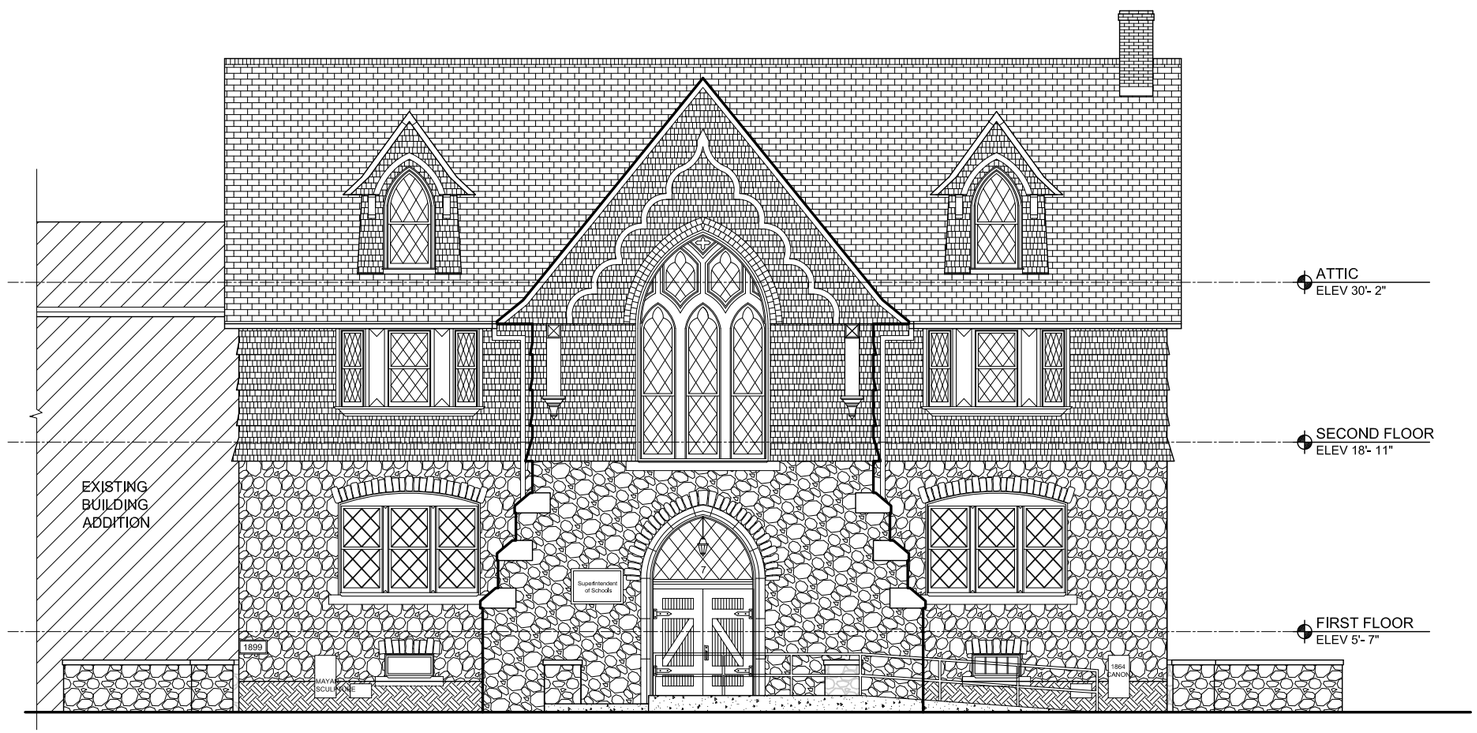

1 NORTH ELEVATION
3/32"=1'-0"

Soldier's Memorial Hall

2 Park Row
Mansfield, MA 02048
Building Exterior Restoration

Date:	11/22/2013
Drawn By:	FJM
Reviewed By:	JCH
Project No:	1682.00

MK &A McGinley Kalsow & Associates, Inc.
ARCHITECTS & PRESERVATION PLANNERS
324 Broadway, P.O. Box 45248
Somerville, MA 02145
617.625.8901 - www.mcginleykalsow.com

NORTH ELEVATION

A2.1

2 WEST ELEVATION
3/32"=1'-0"

Soldier's Memorial Hall

2 Park Row
Mansfield, MA 02048
Building Exterior Restoration

Date:	11/22/2013
Drawn By:	FJM
Reviewed By:	JCH
Project No:	1682.00

McGinley Kalsow & Associates, Inc.
ARCHITECTS & PRESERVATION PLANNERS
324 Broadway, P.O. Box 45248
Somerville, MA 02145
617.625.8901 - www.mcginleykalsow.com

WEST ELEVATION

A2.2

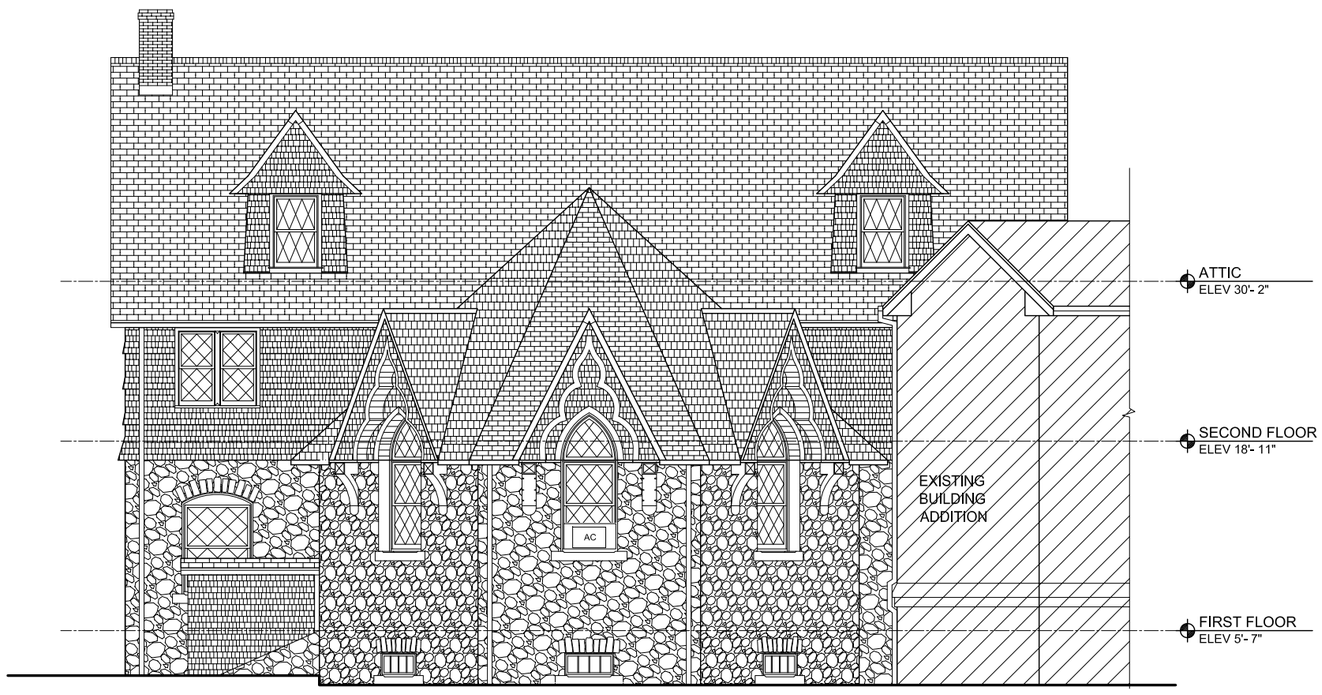

3 SOUTH ELEVATION
3/32"=1'-0"

Soldier's Memorial Hall

2 Park Row
Mansfield, MA 02048
Building Exterior Restoration

Date:	11/22/2013
Drawn By:	FJM
Reviewed By:	JCH
Project No:	1682.00

McGinley Kalsow & Associates, Inc.
ARCHITECTS & PRESERVATION PLANNERS
324 Broadway, P.O. Box 45248
Somerville, MA 02145
617.625.8901 - www.mcginleykalsow.com

SOUTH ELEVATION

A2.3

4 EAST ELEVATION
3/32"=1'-0"

Soldier's Memorial Hall

2 Park Row
Mansfield, MA 02048
Building Exterior Restoration

Date:	11/22/2013
Drawn By:	FJM
Reviewed By:	JCH
Project No:	1682.00

MK &A McGinley Kalsow & Associates, Inc.
ARCHITECTS & PRESERVATION PLANNERS
324 Broadway, P.O. Box 45248
Somerville, MA 02145
617.625.8901 - www.mcginleykalsow.com

EAST
ELEVATION

A2.4

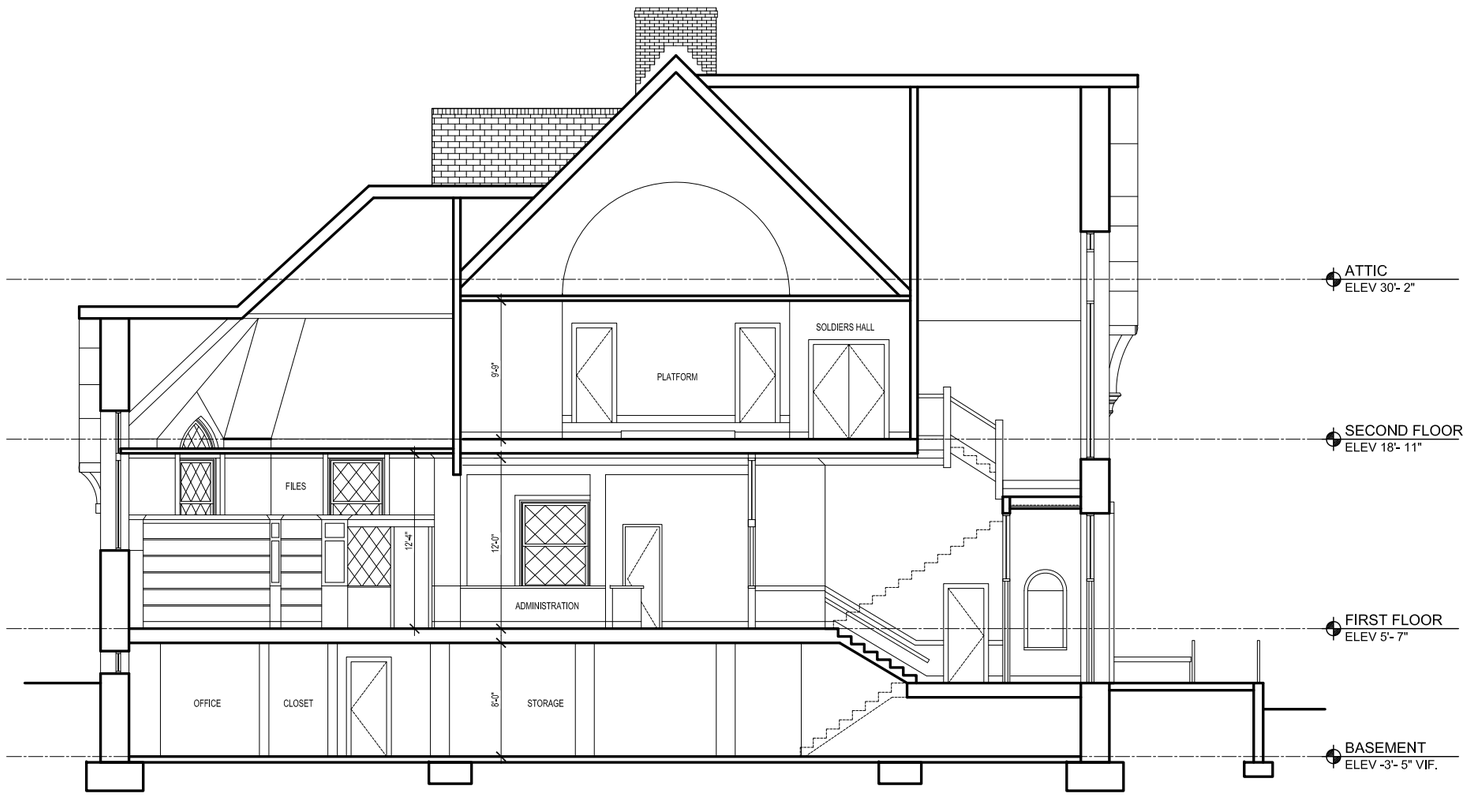

1 BUILDING SECTION 1
3/32"=1'-0"

Town of
Mansfield, MA

Soldier's Memorial Hall

2 Park Row
Mansfield, MA 02048
Building Exterior Restoration

Date:	1/3/2014
Drawn By:	FJM
Reviewed By:	DLM
Project No:	1682.00

McGinley Kalsow & Associates, Inc.
ARCHITECTS & PRESERVATION PLANNERS
324 Broadway, P.O. Box 45248
Somerville, MA 02145
617.625.8901 - www.mcginleykalsow.com

BUILDING
SECTION 1

A3.1

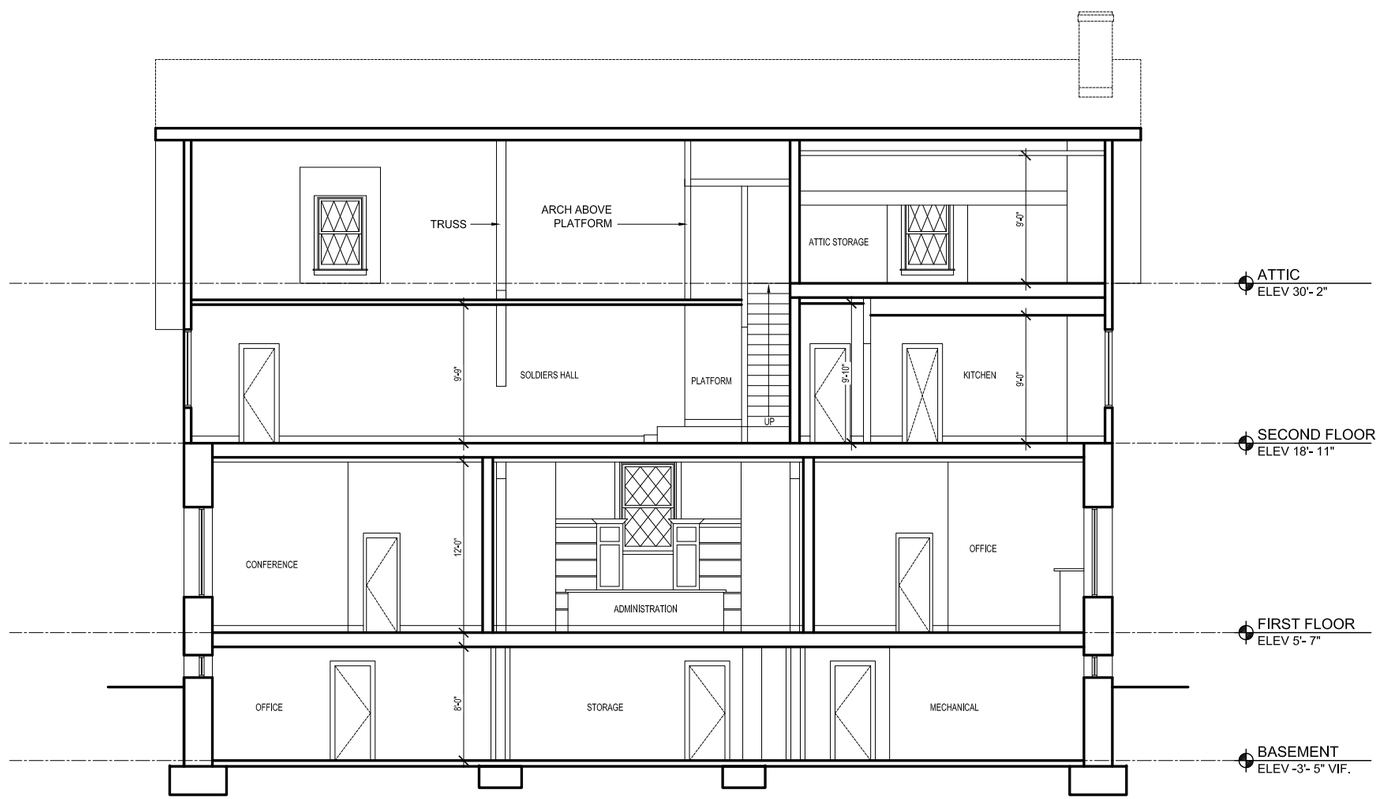

2 BUILDING SECTION 2
3/32"=1'-0"

Town of
Mansfield, MA

Soldier's Memorial Hall

2 Park Row
Mansfield, MA 02048
Building Exterior Restoration

Date:	1/3/2014
Drawn By:	FJM
Reviewed By:	DLM
Project No:	1682.00

McGinley Kalsow & Associates, Inc.
ARCHITECTS & PRESERVATION PLANNERS
324 Broadway, P.O. Box 45248
Somerville, MA 02145
617.625.8901 - www.mcginleykalsow.com

BUILDING SECTION 2

A3.2

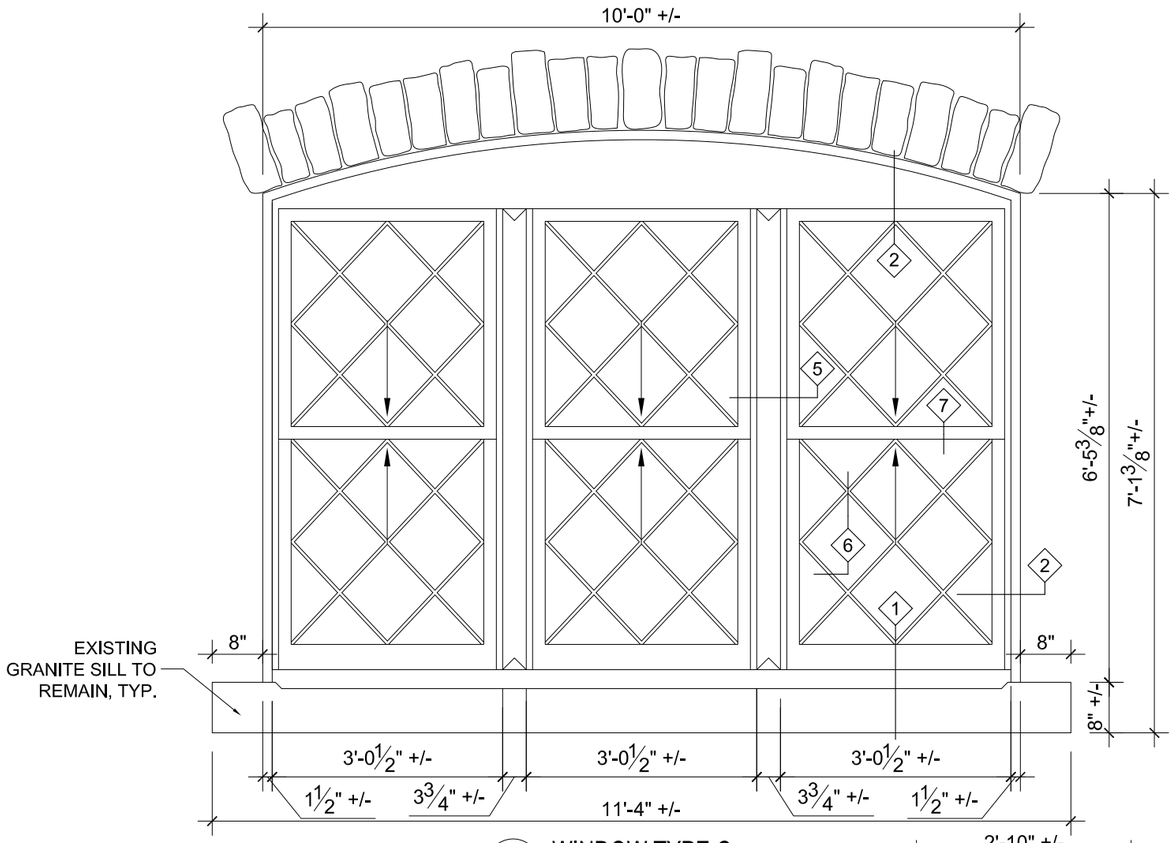

5 WINDOW TYPE C
1/2"=1'-0"

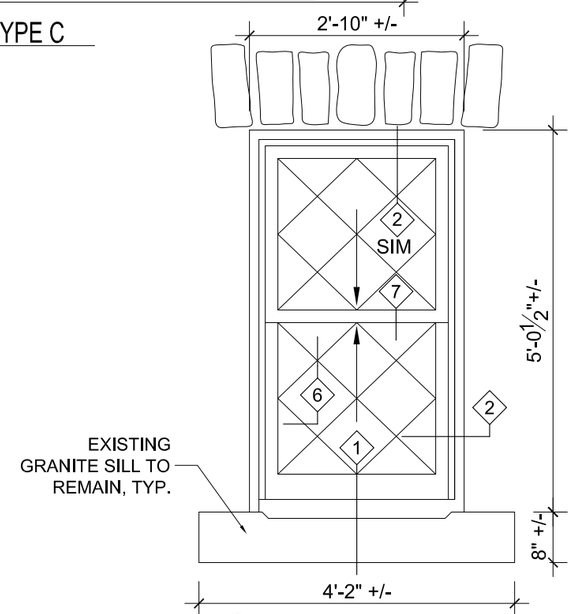

4 WINDOW TYPE B
1/2"=1'-0"

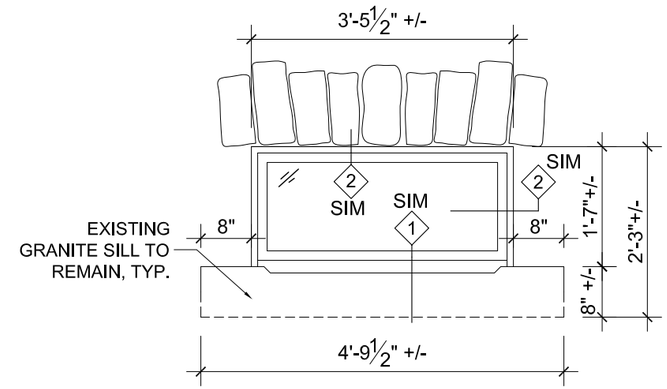

3 WINDOW TYPE A2
1/2"=1'-0"

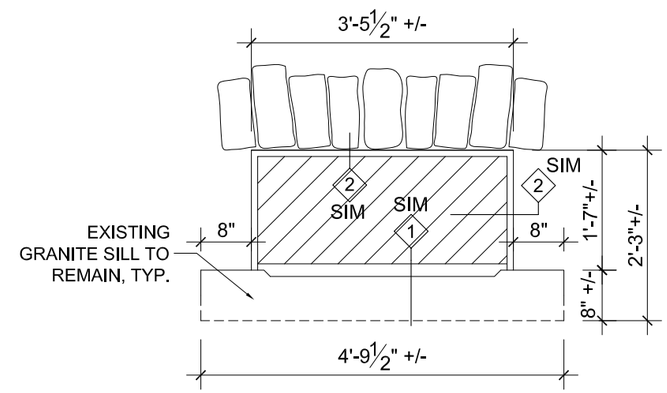

2 WINDOW TYPE A1
1/2"=1'-0"

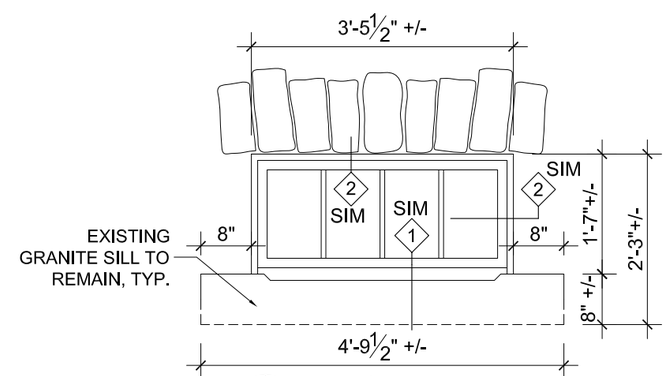

1 WINDOW TYPE A
1/2"=1'-0"

Town of
Mansfield, MA

Soldier's Memorial Hall

2 Park Row
Mansfield, MA 02048
Building Exterior Restoration

Date:	1/3/2014
Drawn By:	FJM
Reviewed By:	DLM
Project No:	1682.00

McGinley Kalsow & Associates, Inc.
ARCHITECTS & PRESERVATION PLANNERS
324 Broadway, P.O. Box 45248
Somerville, MA 02145
617.625.8901 - www.mcginleykalsow.com

WINDOW TYPE
ELEVATIONS

A8.2

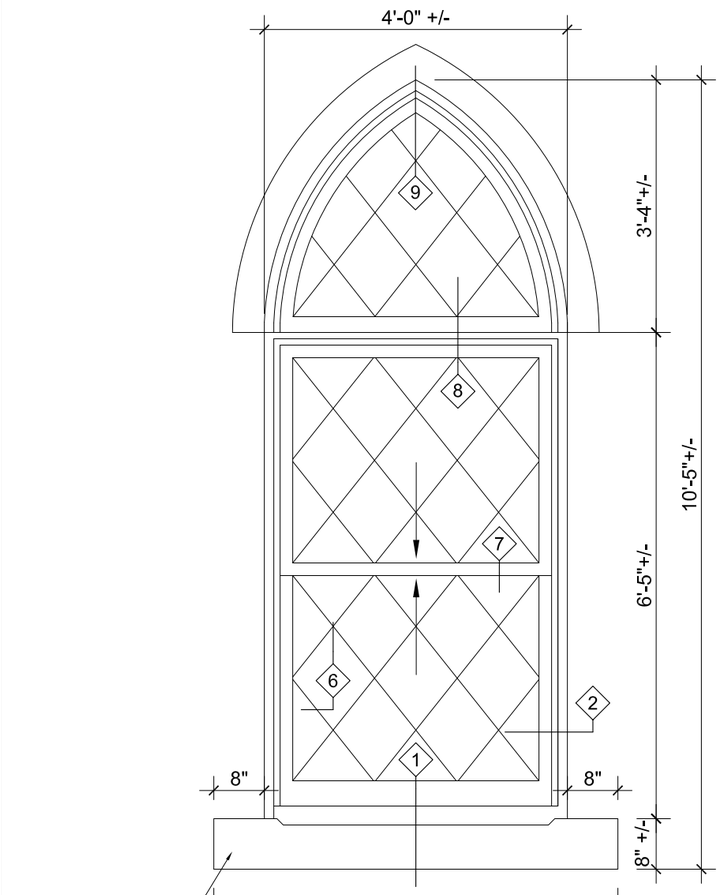

3 WINDOW TYPE F
1/2"=1'-0"

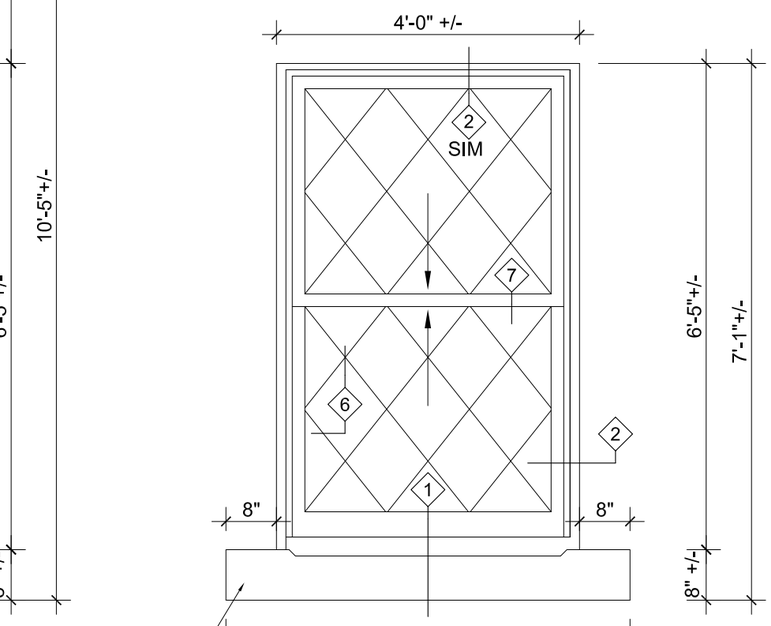

2 WINDOW TYPE E
1/2"=1'-0"

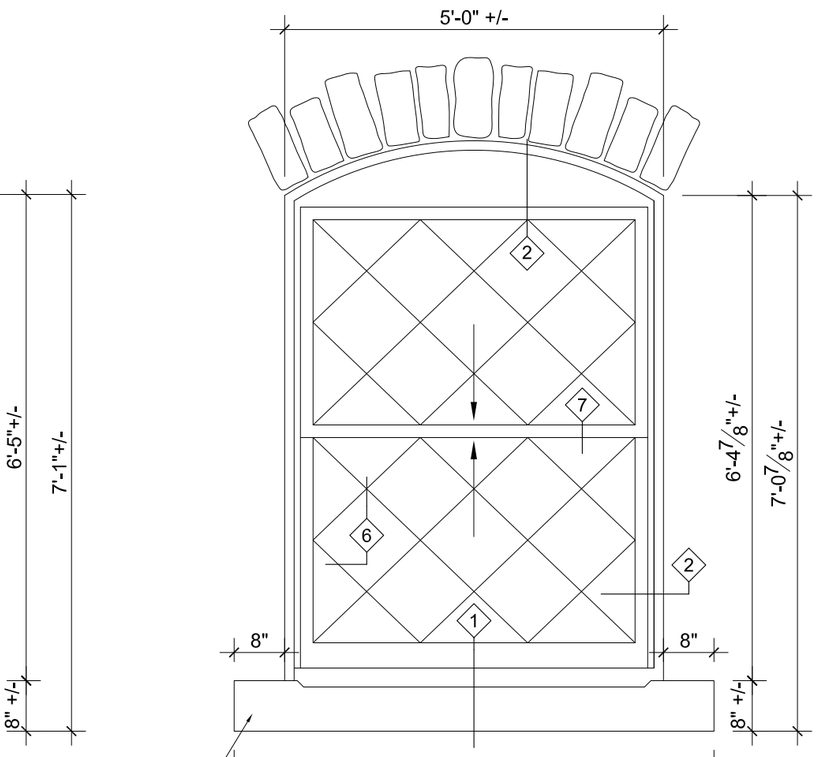

1 WINDOW TYPE D
1/2"=1'-0"

Town of
Mansfield, MA

Soldier's Memorial Hall

2 Park Row
Mansfield, MA 02048
Building Exterior Restoration

Date:	1/3/2014
Drawn By:	FJM
Reviewed By:	DLM
Project No:	1682.00

McGinley Kalsow & Associates, Inc.
ARCHITECTS & PRESERVATION PLANNERS
324 Broadway, P.O. Box 45248
Somerville, MA 02145
617.625.8901 - www.mcginleykalsow.com

WINDOW TYPE
ELEVATIONS

A8.3

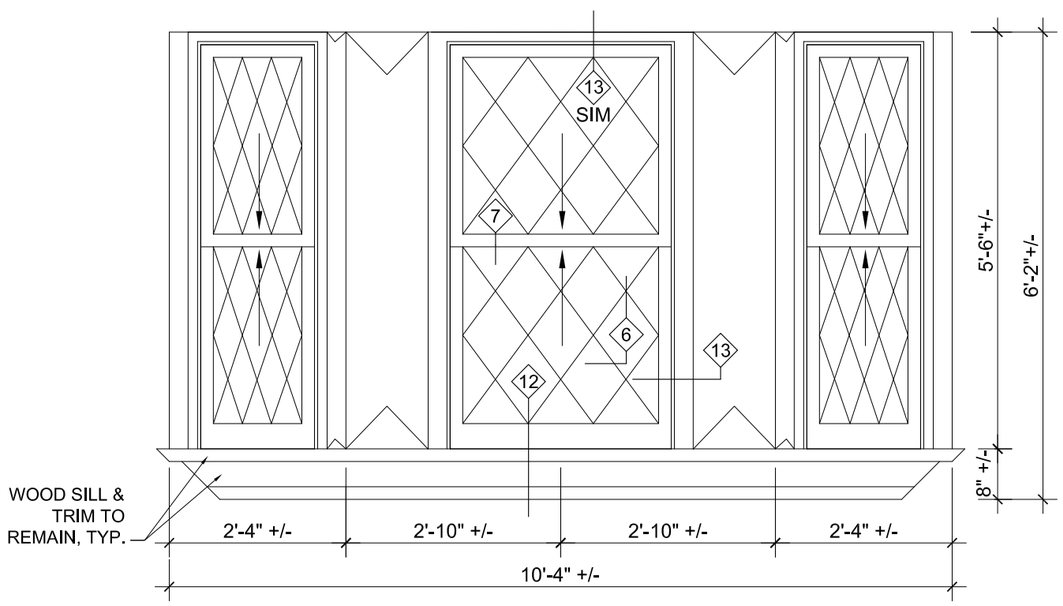

2 WINDOW TYPE H
1/2"=1'-0"

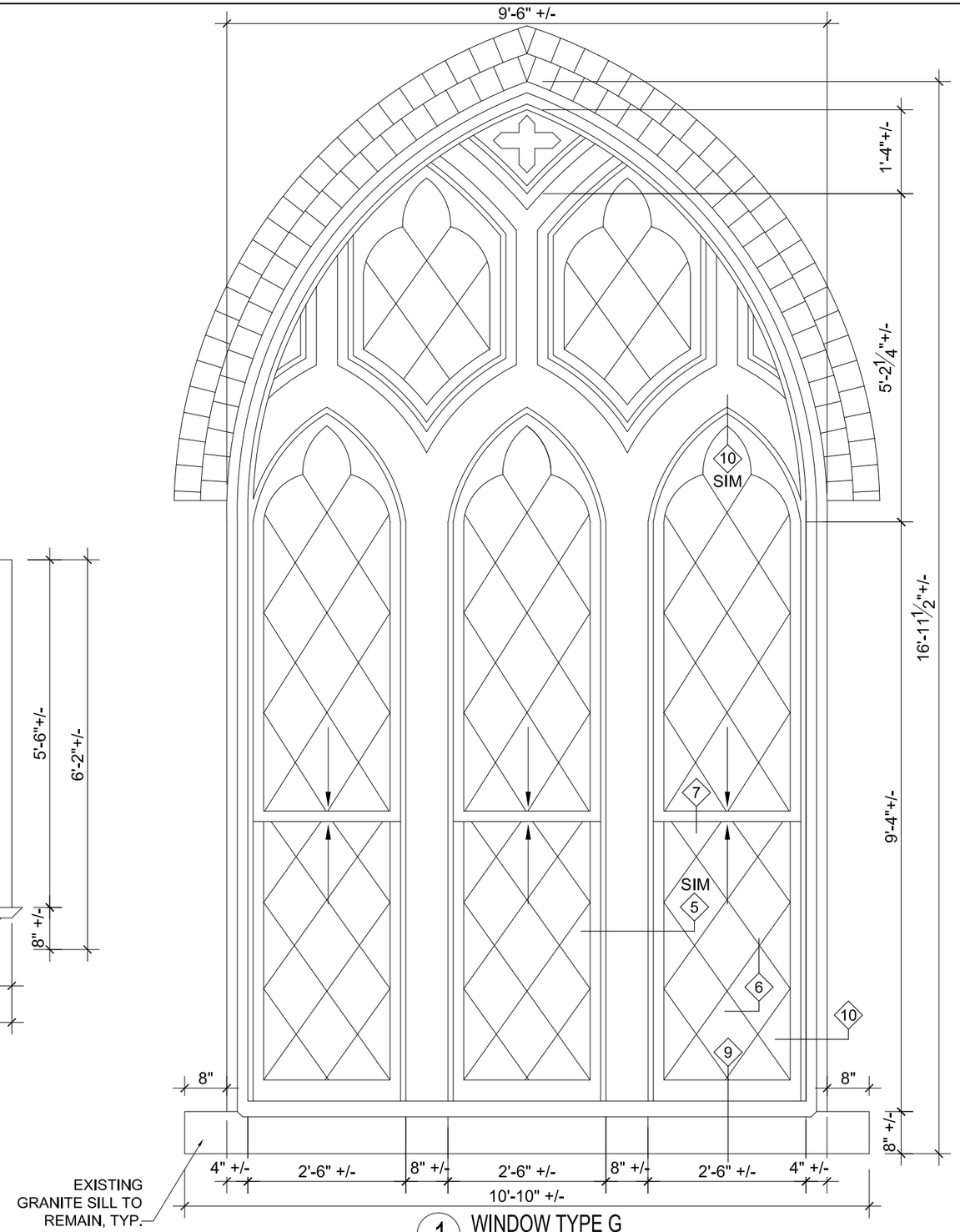

1 WINDOW TYPE G
1/2"=1'-0"

Town of
Mansfield, MA

Soldier's Memorial Hall
2 Park Row
Mansfield, MA 02048
Building Exterior Restoration

Date:	1/3/2014
Drawn By:	FJM
Reviewed By:	DLM
Project No:	1682.00

McGinley Kalsow & Associates, Inc.
ARCHITECTS & PRESERVATION PLANNERS
324 Broadway, P.O. Box 45248
Somerville, MA 02145
617.625.8901 - www.mcginleykalsow.com

WINDOW TYPE
ELEVATIONS

A8.4

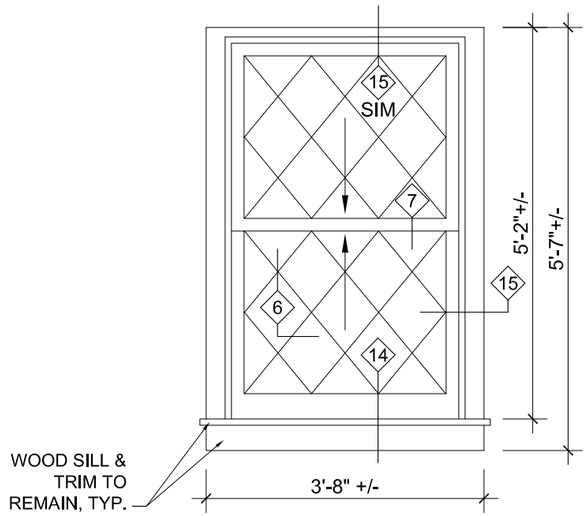

4 WINDOW TYPE N
1/2"=1'-0"

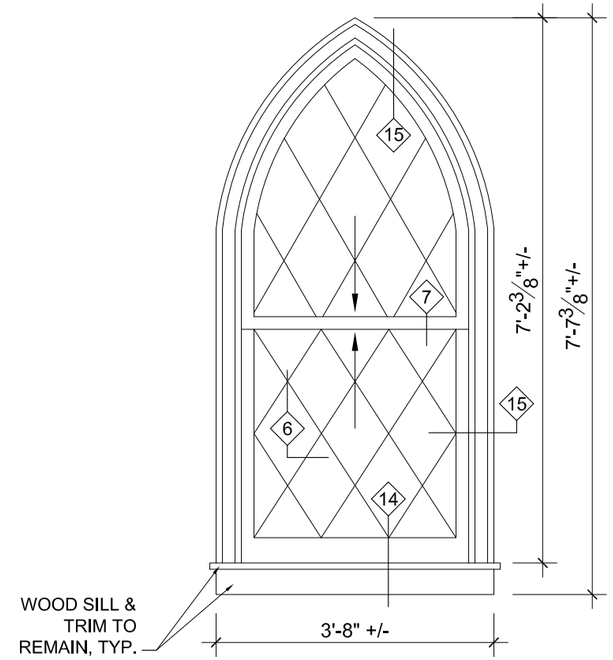

3 WINDOW TYPE M
1/2"=1'-0"

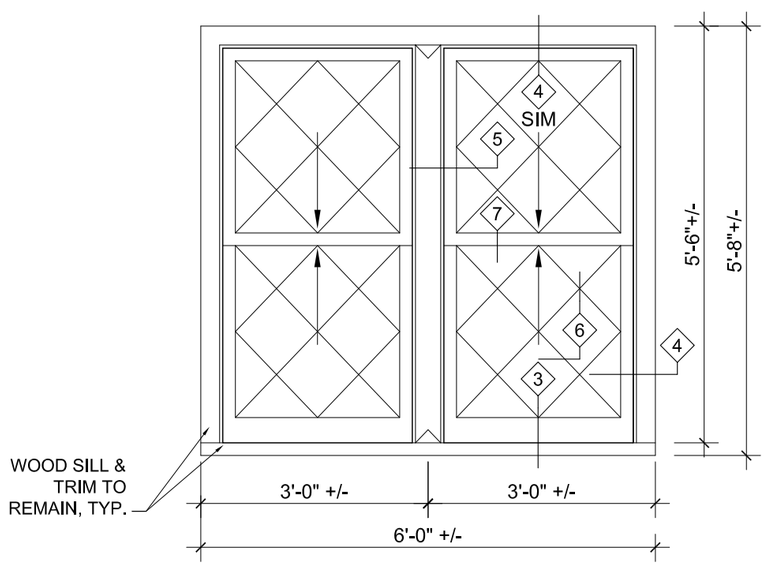

2 WINDOW TYPE K
1/2"=1'-0"

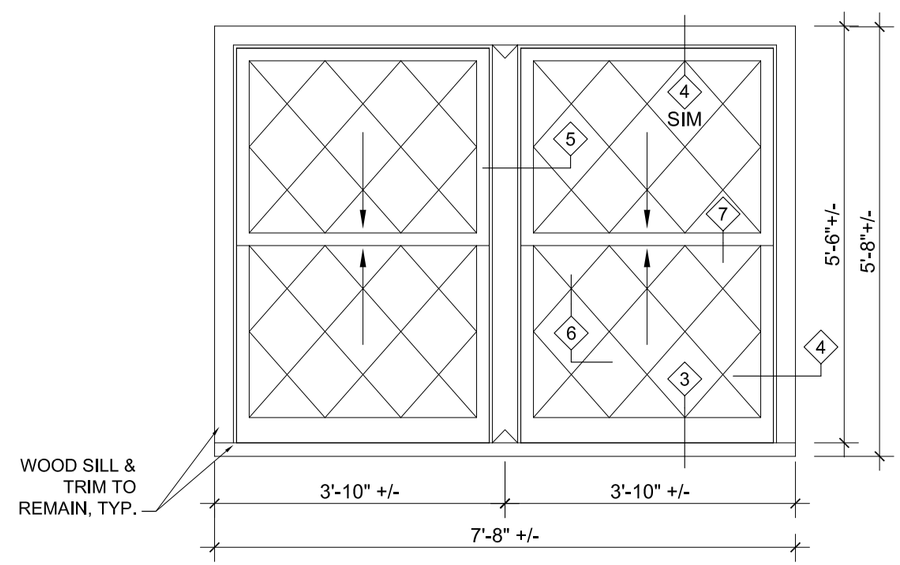

1 WINDOW TYPE J
1/2"=1'-0"

Town of
Mansfield, MA

Soldier's Memorial Hall

2 Park Row
Mansfield, MA 02048
Building Exterior Restoration

Date:	1/3/2014
Drawn By:	FJM
Reviewed By:	DLM
Project No:	1682.00

McGinley Kalsow & Associates, Inc.
ARCHITECTS & PRESERVATION PLANNERS
324 Broadway, P.O. Box 45248
Somerville, MA 02145
617.625.8901 - www.mcginleykalsow.com

WINDOW TYPE
ELEVATIONS

A8.5

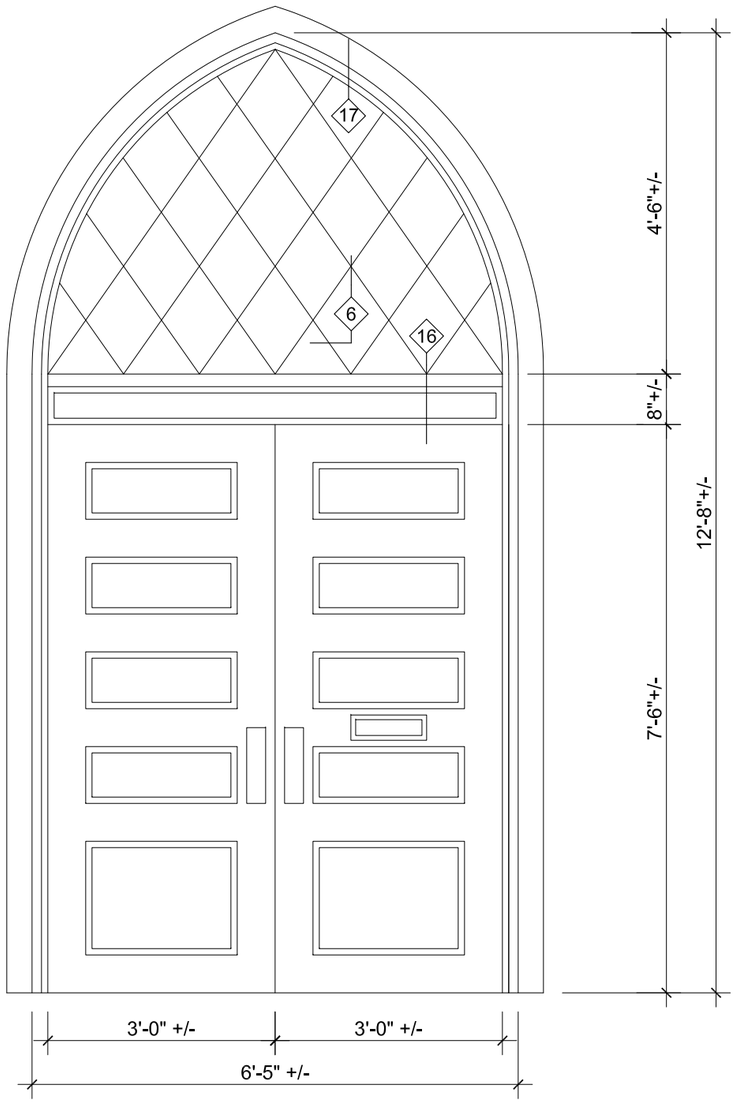

2 DOOR 102 WINDOW 116 TYPE P1
1/2"=1'-0"

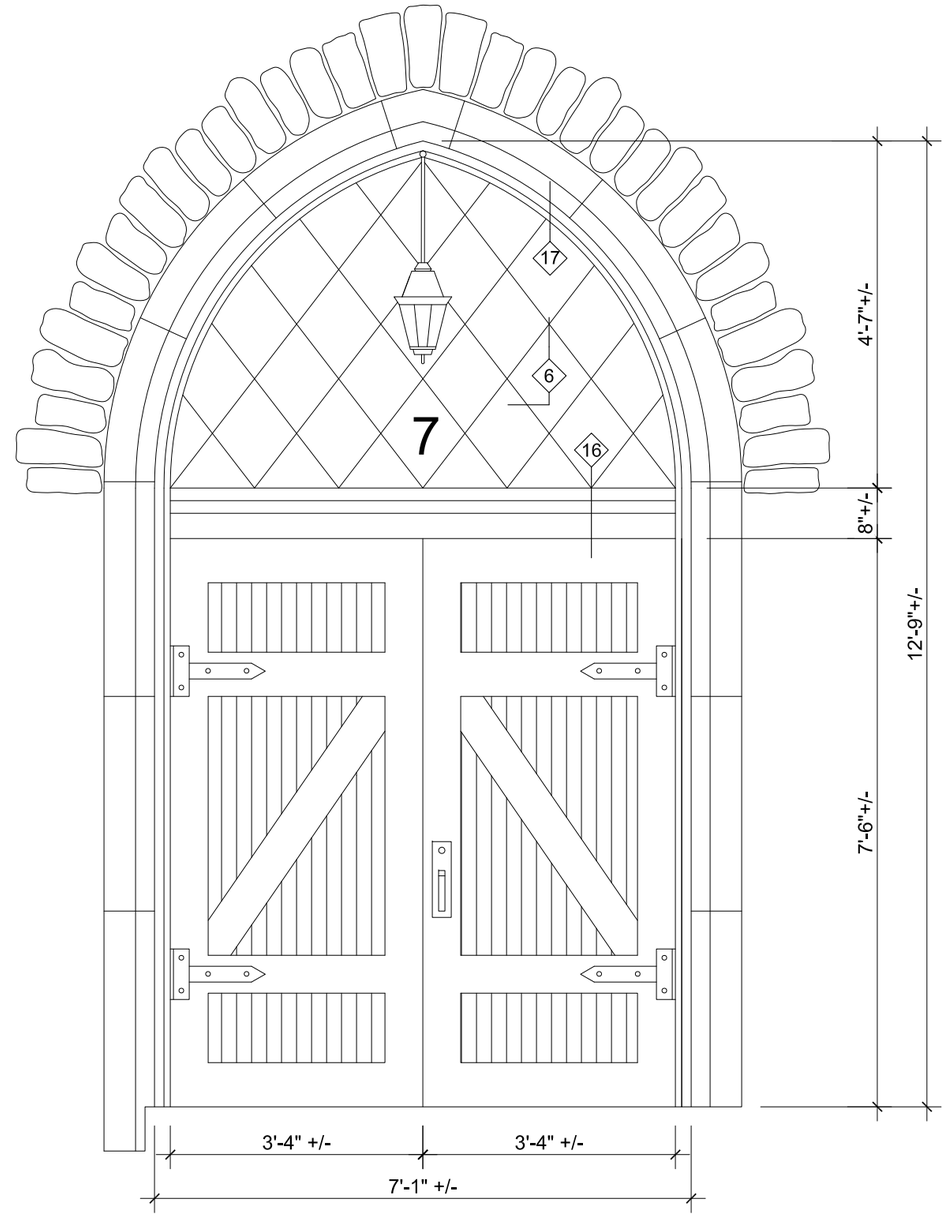

1 DOOR 101 WINDOW 115 TYPE P
1/2"=1'-0"

Town of
Mansfield, MA

Soldier's Memorial Hall

2 Park Row
Mansfield, MA 02048
Building Exterior Restoration

Date:	1/3/2014
Drawn By:	FJM
Reviewed By:	DLM
Project No:	1682.00

McGinley Kalsow & Associates, Inc.
ARCHITECTS & PRESERVATION PLANNERS
324 Broadway, P.O. Box 45248
Somerville, MA 02145
617.625.8901 - www.mcginleykalsow.com

DOOR &
WINDOW TYPE
ELEVATIONS

A8.6

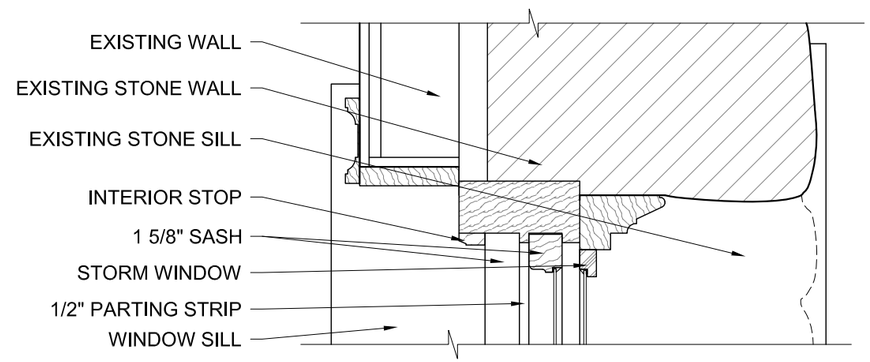

2 FIRST FLOOR JAMB/ HEAD DETAIL
1 1/2" = 1'-0"

4 SECOND FLOOR JAMB/ HEAD DETAIL
1 1/2" = 1'-0"

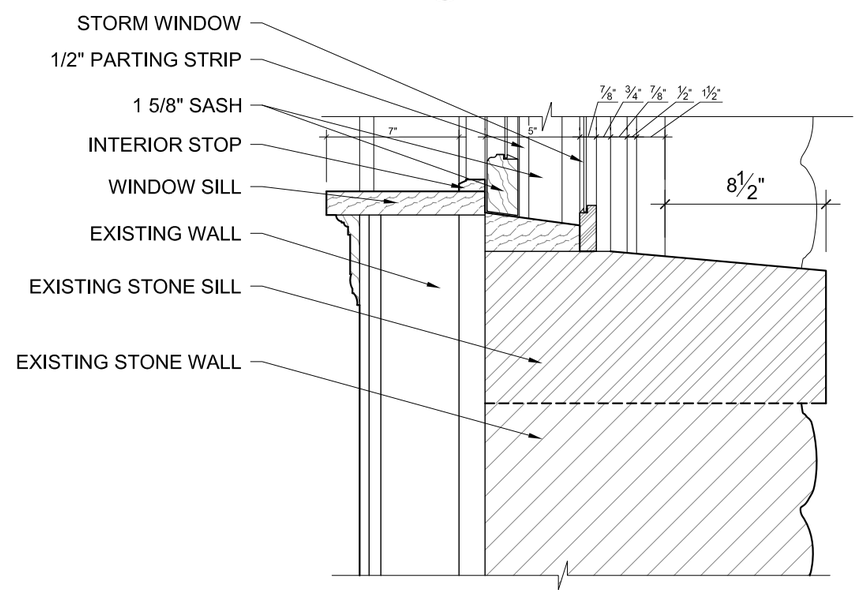

1 FIRST FLOOR SILL DETAIL
1 1/2" = 1'-0"

3 SECOND FLOOR SILL DETAIL
1 1/2" = 1'-0"

Town of
Mansfield, MA

Soldier's Memorial Hall
2 Park Row
Mansfield, MA 02048
Building Exterior Restoration

Date:	1/3/2014
Drawn By:	FJM
Reviewed By:	DLM
Project No:	1682.00

McGinley Kalsow & Associates, Inc.
ARCHITECTS & PRESERVATION PLANNERS
324 Broadway, P.O. Box 45248
Somerville, MA 02145
617.625.8901 - www.mcginleykalsow.com

WINDOW DETAILS

A8.7

8 INTERMEDIATE RAIL DETAIL
1 1/2" = 1'-0"

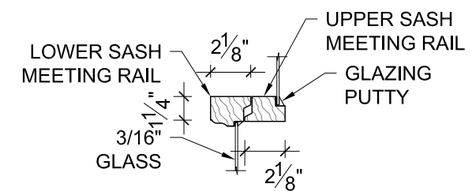

7 MEETING RAIL DETAIL
1 1/2" = 1'-0"

11 SECOND FLOOR JAMB/ HEAD DETAIL @ G TYPE WINDOWS
1 1/2" = 1'-0"

9 SECOND FLOOR JAMB/ HEAD DETAIL @ E & F TYPE WINDOWS
1 1/2" = 1'-0"

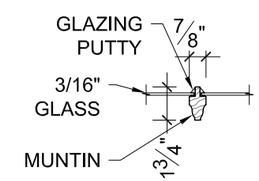

6 MUNTIN DETAIL
1 1/2" = 1'-0"

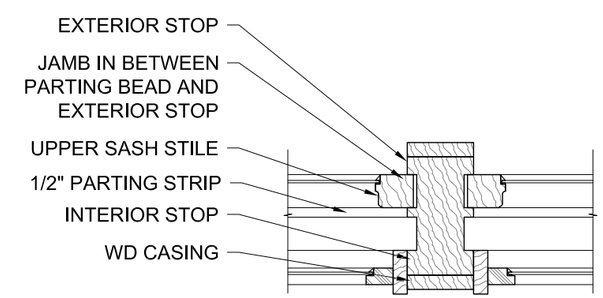

10 FIRST FLOOR SILL DETAIL @ G TYPE WINDOWS
1 1/2" = 1'-0"

5 MULLION DETAIL
1 1/2" = 1'-0"

Town of
Mansfield, MA

Soldier's Memorial Hall
2 Park Row
Mansfield, MA 02048
Building Exterior Restoration

Date:	1/3/2014
Drawn By:	FJM
Reviewed By:	DLM
Project No:	1682.00

McGinley Kalsow & Associates, Inc.
ARCHITECTS & PRESERVATION PLANNERS
324 Broadway, P.O. Box 45248
Somerville, MA 02145
617.625.8901 - www.mcginleykalsow.com

WINDOW DETAILS

A8.8

Scope Drawings

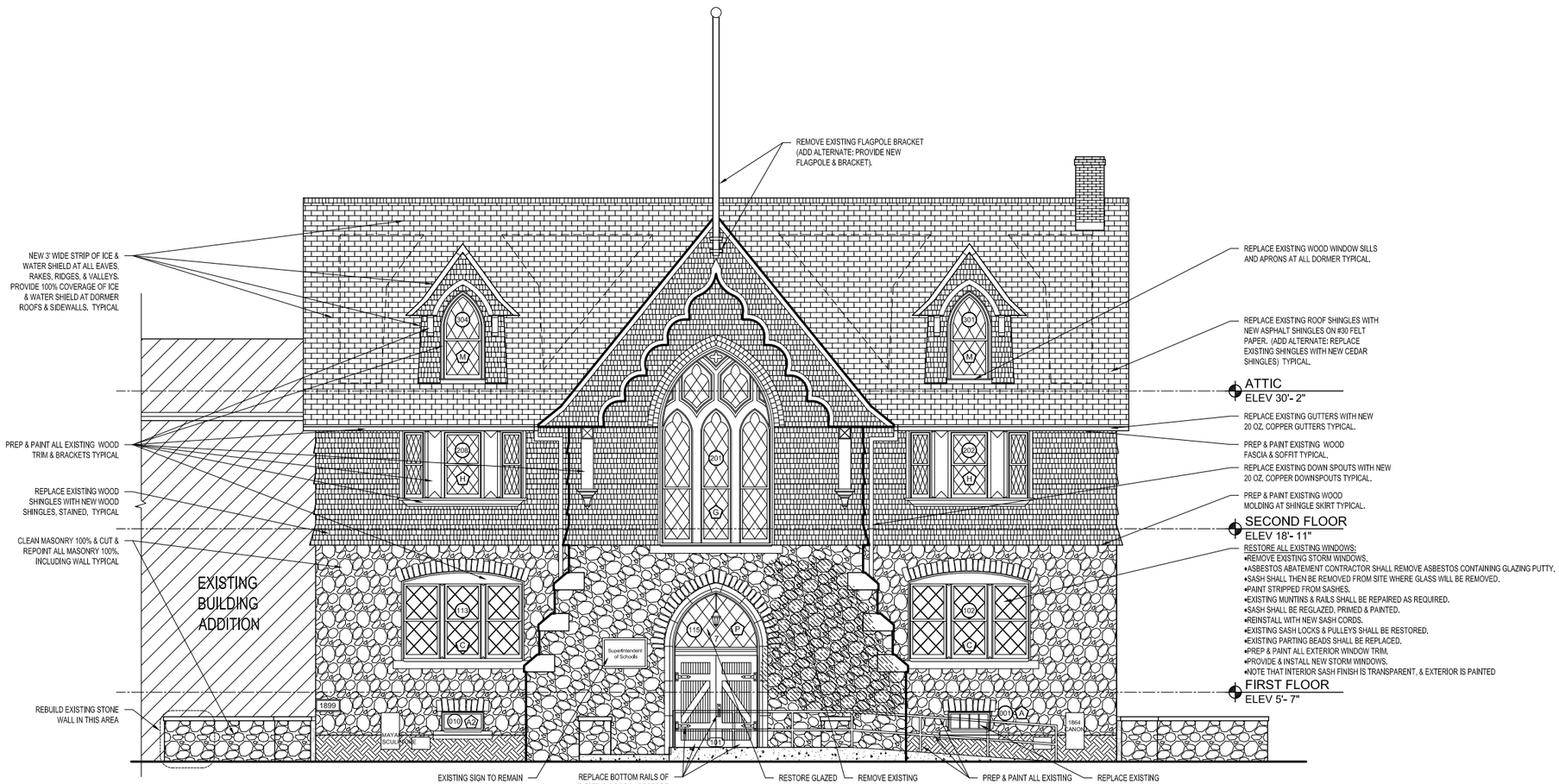

1 NORTH ELEVATION
3/32"=1'-0"

Town of Mansfield, MA

Soldier's Memorial Hall

2 Park Row
Mansfield, MA 02048
Building Exterior Restoration

Date:	1/3/2014
Drawn By:	FJM
Reviewed By:	DLM
Project No:	1682.00

McGinley Kalsow & Associates, Inc.
ARCHITECTS & PRESERVATION PLANNERS
324 Broadway, P.O. Box 45248
Somerville, MA 02145
617.625.8901 - www.mcginleykalsow.com

NORTH ELEVATION

A2.1

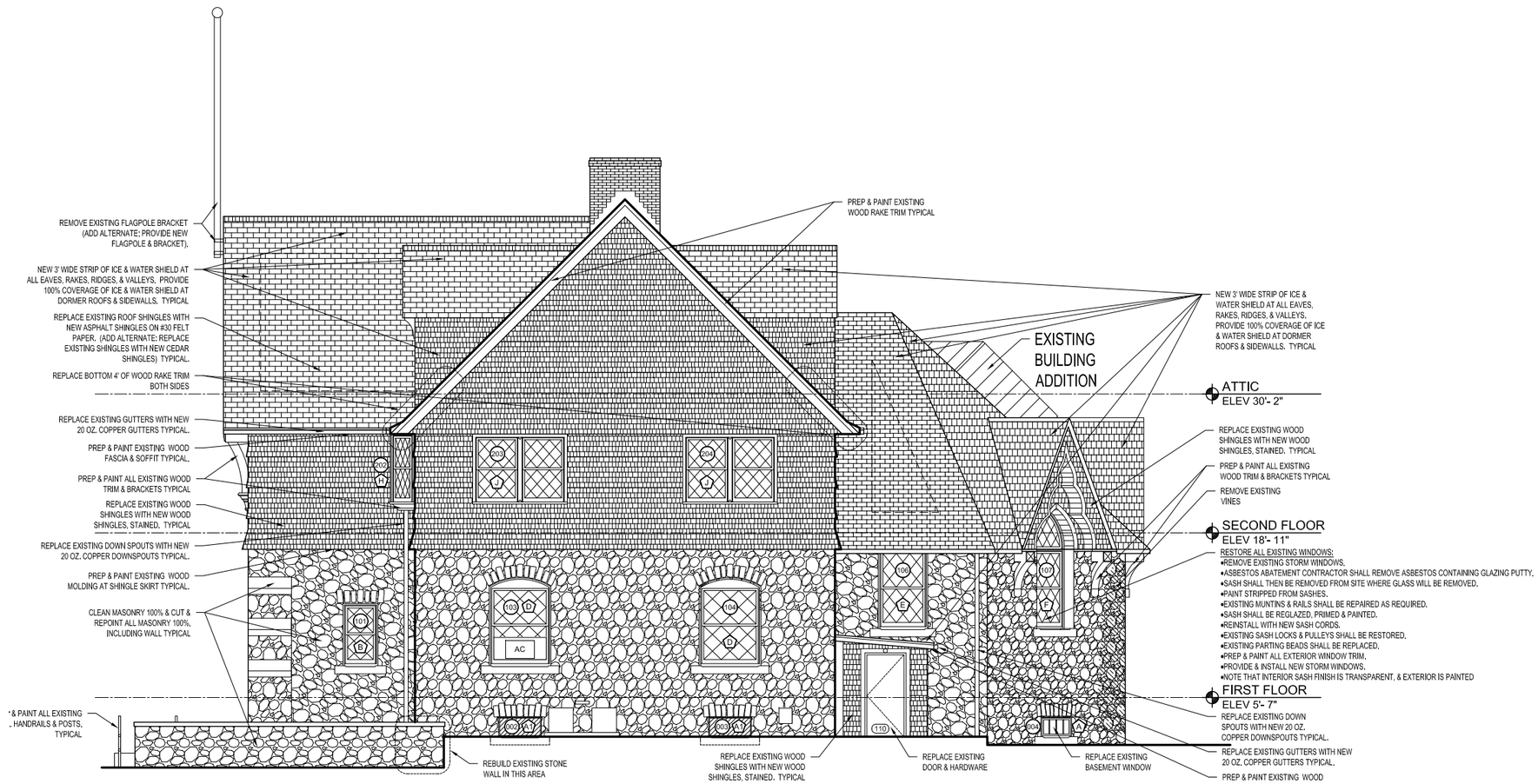

2 WEST ELEVATION
3/32"=1'-0"

Town of Mansfield, MA

Soldier's Memorial Hall

2 Park Row
Mansfield, MA 02048
Building Exterior Restoration

Date:	1/3/2014
Drawn By:	FJM
Reviewed By:	DLM
Project No:	1682.00

McGinley Kalsow & Associates, Inc.
ARCHITECTS & PRESERVATION PLANNERS
324 Broadway, P.O. Box 45248
Somerville, MA 02145
617.625.8901 - www.mcginleykalsow.com

WEST ELEVATION

A2.2

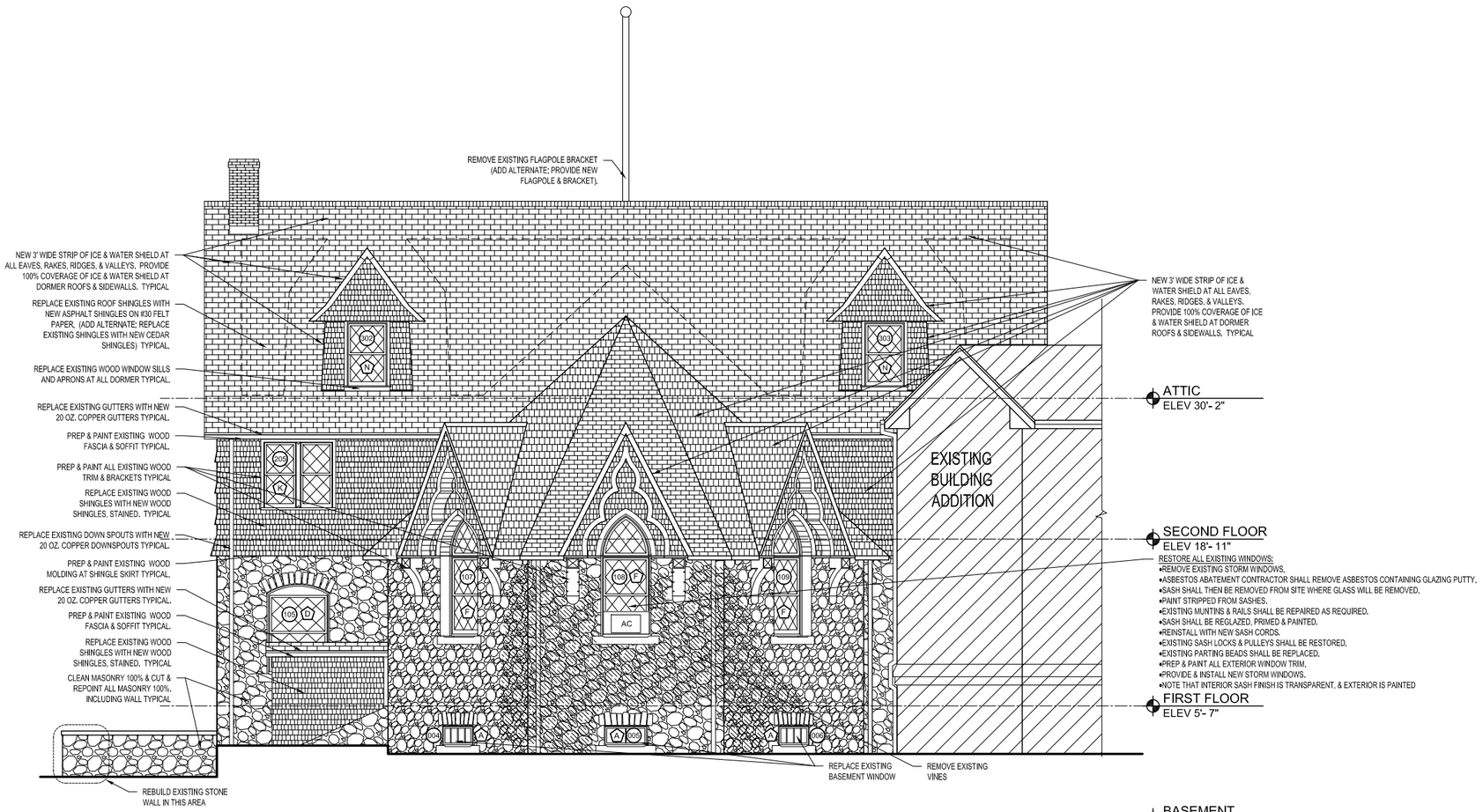

3 SOUTH ELEVATION
3/32"=1'-0"

Town of Mansfield, MA

Soldier's Memorial Hall

2 Park Row
Mansfield, MA 02048
Building Exterior Restoration

Date:	1/3/2014
Drawn By:	FJM
Reviewed By:	DLM
Project No:	1682.00

McGinley Kalsow & Associates, Inc.
ARCHITECTS & PRESERVATION PLANNERS
324 Broadway, P.O. Box 45248
Somerville, MA 02145
617.625.8901 - www.mcginleykalsow.com

SOUTH ELEVATION

A2.3

4 EAST ELEVATION
3/32"=1'-0"

Town of Mansfield, MA

Soldier's Memorial Hall

2 Park Row
Mansfield, MA 02048
Building Exterior Restoration

Date:	1/3/2014
Drawn By:	FJM
Reviewed By:	DLM
Project No:	1682.00

McGinley Kalsow & Associates, Inc.
ARCHITECTS & PRESERVATION PLANNERS
324 Broadway, P.O. Box 45248
Somerville, MA 02145
617.625.8901 - www.mcginleykalsow.com

EAST ELEVATION

A2.4